IF USING 11"X17" PLOT, DRAWINGS WILL BE HALF SCALE

## CONSTRUCTION DRAWING

ALL WORK AND MATERIALS SHALL BE PERFORMED AND INSTALLED IN ACCORDANCE WITH THE CURRENT EDITIONS OF THE FOLLOWING CODES AS ADOPTED BY THE LOCAL GOVERNING AUTHORITIES. NOTHING IN THESE PLANS IS TO BE CONSTRUCTED TO PERMIT WORK NOT CONFORMING TO THESE CODES.

1. 2022 CALIFORNIA ADMINISTRATIVE CODE
2. 2022 CALIFORNIA BUILDING CODE
3. 2022 CALIFORNIA ELECTRIC CODE
4. 2022 CALIFORNIA MECHANICAL CODE
5. 2022 CALIFORNIA PLUMBING CODE
6. 2022 CALIFORNIA FIRE CODE
7. ANY LOCAL BUILDING CODE AMENDMENTS TO THE ABOVE
8. CITY/COUNTY ORDINANCES

HANDICAP REQUIREMENTS:
FACILITY IS UNMANNED AND NOT FOR HUMAN HABITATION AND IS EXEMPT FROM ACCESSIBILITY REQUIREMENTS IN ACCORDANCE WITH 2022 CALIFORNIA BUILDING CODE SECTION 11B-203.5

## CODE COMPLIANCE

THE FACILITY IS UNMANNED AND NOT FOR HUMAN HABITATION. A TECHNICIAN WILL VISIT THE SITE AS REQUIRED FOR ROUTINE MAINTENANCE. THE PROJECT WILL NOT RESULT IN ANY SIGNIFICANT DISTURBANCE OR EFFECT ON DRAINAGE; NO SANITARY SEWER SERVICE, POTABLE WATER, OR TRASH DISPOSAL IS REQUIRED AND NO COMMERCIAL SIGNAGE IS NEW.

## GENERAL NOTES

811 Know what's below. Call before you dig.

TO OBTAIN LOCATION OF PARTICIPANTS UNDERGROUND FACILITIES BEFORE YOU DIG IN CALIFORNIA (SOUTH), CALL DIG ALERT
TOLL FREE: 1-800-422-4133 OR
www.digalert.org
CALIFORNIA STATUTE REQUIRES MIN OF 2 WORKING DAYS NOTICE BEFORE YOU EXCAVATE

| | |
|---|---|
| PROPERTY OWNER: | CITY OF GLENDALE<br>541 WEST CHEVY DR.<br>GLENDALE, CA 91204<br>(818) 548-2054 |
| APPLICANT: | AT&T<br>1452 EDINGER AVENUE<br>TUSTIN, CA 92780 |
| APPLICANT REPRESENTATIVE: | EUKON GROUP<br>65 POST, SUITE 1000<br>IRVINE, CA 92618 |
| LATITUDE (NAD 83): | 34° 10' 31.14" N<br>34.175317° |
| LONGITUDE (NAD 83): | 118° 13' 15.4" W<br>-118.220944° |
| GROUND ELEVATION (NAVD 88): | 1094.69' AMSL |
| APN: | 5659-015-904 |
| ZONING JURISDICTION: | CITY OF GLENDALE |
| ZONING: | R1R-III |
| USE: | UNMANNED TELCOMMUNICATIONS FACILITY |
| LEASE AREA (GROUND / AIR): | 1144.7 SQ.FT. |
| OCCUPANCY TYPE: | U |
| CONSTRUCTION TYPE: | II-B |

## SITE INFORMATION


PROJECT MANAGER:
AT&T MOBILITY, LA MARKET
1452 EDINGER AVENUE, 3RD FLOOR
TUSTIN, CA 92780
CONTACT: RYAN K YOUNG
PHONE: (714) 488-4029
EMAIL: ry456p@us.att.com

A&E CONTACT:
EUKON
65 POST, SUITE 1000
IRVINE, CA 92618
CONTACT: RICH BRUNET
PHONE: 866-55-EUKON EX. 1013
EMAIL:rich.brunet@eukongroup.com

LEASING:
EUKON
65 POST, SUITE 1000
IRVINE, CA 92618
CONTACT: JERRY AMBROSE
PHONE: (805) 637-7407
EMAIL: jambrose@wireless01.com

ZONING:
EUKON
65 POST, SUITE 1000
IRVINE, CA 92618
CONTACT: JERRY AMBROSE
PHONE: (805) 637-7407
EMAIL: jambrose@wireless01.com

RF ENGINEER:
AT&T
1452 EDINGER AVENUE, 3RD FLOOR
TUSTIN, CA 92780
CONTACT: SANDEEP MANGAT
PHONE: (530) 540-4201
EMAIL: sm2840@att.com

CONSTRUCTION:
AT&T
1452 EDINGER AVE,
TUSTIN, CA 92780
CONTACT: ANDRE CAMOU
PHONE: (562) 293-6236
EMAIL: ac2960@at&t.com


## PROJECT TEAM

# SITE NUMBER: CLL05599

PACE#: MRLOS078897
FA#: 12844646
USID#: 319268

at&t

PROJECT: NSB + C-BAND
SITE TYPE: RAWLAND / MONOPINE
SITE ADDRESS:
1880 LOMA VISTA DR.,
GLENDALE, CA 91208

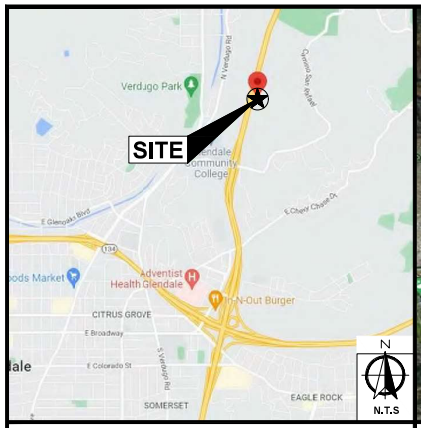


VICINITY MAP

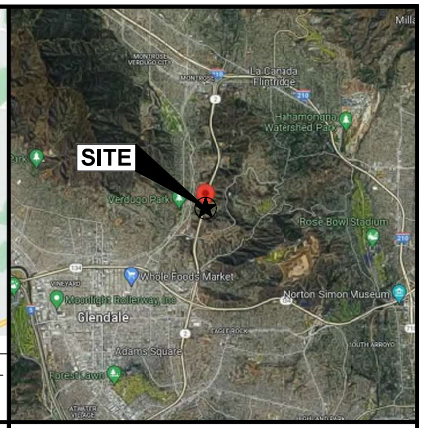


AERIAL MAP

DIRECTIONS FROM AT&T OFFICE:
1452 EDINGER AVE, TUSTIN, CA 92780

GET ON CA-55 N/STATE RTE 55 N IN SANTA ANA FROM EDINGER AVE AND NEWPORT AVE, HEAD SOUTHWEST TOWARD AT&T, TURN LEFT ONTO EDINGER AVE, TURN LEFT ONTO NEWPORT AVE, TURN RIGHT TO MERGE ONTO CA-55 N/STATE RTE 55 N, TAKE I-5 N TO E MOUNTAIN ST IN GLENDALE. TAKE EXIT 18 FROM CA-2 N/GLENDALE FWY, MERGE ONTO CA-55 N/STATE RTE 55 N, TAKE EXIT 10B TO MERGE ONTO I-5 N TOWARD SANTA ANA, KEEP LEFT TO STAY ON I-5 N, KEEP RIGHT AT THE FORK TO STAY ON I-5 N, FOLLOW SIGNS FOR INTERSTATE 5 N/SACRAMENTO, KEEP RIGHT TO CONTINUE ON I-5 N/GOLDEN STATE FWY, FOLLOW SIGNS FOR SACRAMENTO, TAKE EXIT 139A TO MERGE ONTO CA-2 N/GLENDALE FWY TOWARD GLENDALE, TAKE EXIT 18 FOR MOUNTAIN ST, FOLLOW E MOUNTAIN ST, N VERDUGO RD AND SHERER LN TO LOMA VISTA DR. USE ANY LANE TO TURN LEFT ONTO E MOUNTAIN ST, TURN RIGHT ONTO N VERDUGO RD, SLIGHT RIGHT TO STAY ON N VERDUGO RD, TURN RIGHT ONTO SHERER LN, TURN RIGHT ONTO LOMA VISTA DR.

## DRIVING DIRECTIONS

## PROJECT DESCRIPTION

AT&T WIRELESS PROPOSES TO CONSTRUCT A WIRELESS INSTALLATION. THE SCOPE WILL CONSIST OF THE FOLLOWING:

OUTDOOR EQUIPMENT

- INSTALL (1) 68' HIGH MONOPINE
- INSTALL (12) PANEL ANTENNAS
- INSTALL (12) REMOTE RADIO UNITS (RRU)
- INSTALL (3) DC9 SURGE SUPPRESSORS
- INSTALL (1) DC50 SURGE SUPPRESSORS
- INSTALL (1) 6'-8" x 6'-8" PRE-FAB STEEL W.I.C. (WALK IN CABINET)
- INSTALL (1) AT&T POLAR DC 20KV GENERATOR w/ 125 GAL DIESEL TANK
- INSTALL (1) 20' x 30' x 10' CMU ENCLOSURE
- INSTALL (1) CIENA ON NEW H-FRAME
- INSTALL (1) TELCO BOX ON NEW H-FRAME
- INSTALL 200A METER SERVICE PEDESTAL
- INSTALL (2) NEW TREES

## SHEET INDEX



SUBCONTRACTOR SHALL VERIFY ALL PLANS & EXISTING DIMENSIONS & CONDITIONS ON THE JOB SITE & SHALL IMMEDIATELY NOTIFY THE ENGINEER IN WRITING OF ANY DISCREPANCIES BEFORE PROCEEDING WITH THE WORK OR BE RESPONSIBLE FOR SAME.

DO NOT SCALE DRAWINGS

APPLICANT:

The new at&t
1452 EDINGER AVENUE,
3RD FLOOR
TUSTIN, CA 92780

ENGINEER:

Eukon
an SFC Communications, Inc. Company
65 POST, SUITE 1000
IRVINE, CA 92618
TEL: (949) 553-8566
www.eukongroup.com



| | |
|---|---|
| DRAWN BY: | MG |
| CHECKED BY: | RB |

REVISIONS:

| REV | DATE | DESCRIPTION |
|---|---|---|
| 3 | 06/07/24 | PLAN CHECK |
| 2 | 03/26/24 | PLAN CHECK |
| 1 | 12/20/23 | PLAN CHECK |
| 0 | 03/27/23 | 100% CONSTRUCTION DRAWING |
| B | 03/09/23 | JURISDICTION COMMENTS |
| A | 01/12/23 | 90% CONSTRUCTION DRAWING |

LICENSEE:

REGISTERED PROFESSIONAL ENGINEER CHRIS A. LEE 78549 CIVIL STATE OF CALIFORNIA

06/07/24

PROJECT INFORMATION:

CLL05599

1880 LOMA VISTA DR.,
GLENDALE, CA 91208

SHEET TITLE:

TITLE SHEET

SHEET NUMBER:

T-1

## LEGEND

| | |
|---|---|
| PROPERTY LINE / LEASE AREA | |
| CENTER LINE | |
| PWR | NEW POWER CABLE |
| FBR | NEW FIBER CABLE |
| P/F | NEW POWER AND FIBER CABLES |
| HYBD | NEW HYBRID CABLES |
| COAX | NEW COAX CABLES |
| OHP | OVERHEAD POWER CABLES |
| OHT | OVERHEAD COMMUNICATIONS CABLES |
| E | EXISTING POWER CABLES |
| T | EXISTING COMMUNICATION CABLES |
| W | EXISTING WATER PIPES |
| S | EXISTING SEWER PIPES |
| SD | EXISTING STORM DRAIN PIPES |
| G | EXISTING GAS PIPES |
| GS | EXISTING GASOLINE PIPES |
| X | CHAIN-LINK FENCING |
| | GROUTED OR PLASTER |
| | BRICK |
| | MASONRY |
| | CONCRETE |
| | STEEL |
| | EARTH |
| | GRAVEL |
| | PLYWOOD |
| | SAND |
| | WOOD CONTINUOUS |
| | WOOD BLOCKING |
| | SPOT ELEVATION |
| 1 | REVISION |
| 1 | GRID REFERENCE |
| - - | DETAIL REFERENCE |
| - - | ELEVATION REFERENCE |
| - - | SECTION REFERENCE |
| E | ELECTRICAL BOX |
| T | TELEPHONE BOX |
| M | ELECTRICAL METER |
| | SAFETY SWITCH (DISCONNECT) |
| | AUTOMATIC TRANSFER SWITCH |
| | CIRCUIT BREAKER |
| | ELECTRICAL SWITCH |
| S | SMOKE DETECTOR |
| | TRANSFORMER |
| | UTILITY POLE |
| | POLE MOUNTED XFMR |
| | PAD MOUNTED XFMR |
| | GROUND ROD |
| | GROUND ROD WITH INSPECTION SLEEVE |
| | GROUND ROD WITH TEST INSPECTION SLEEVE |
| | EXOTHERMIC GROUND CONNECTION |
| | COMPRESSION GROUND CONNECTION |
| | CHEMICAL ELECTROLYTIC GROUNDING |
| | GROUNDING CONDUCTOR |
| | GROUND BAR |

3

## ABBREVIATIONS

| | |
|---|---|
| A | AMPERE |
| A&E | ARCHITECTURE AND ENGINEERING |
| A.B. | ANCHOR BOLT |
| ABV. | ABOVE |
| AC | ALTERNATE CURRENT/AIR CONDITIONER |
| ACCA | ANTENNA CABLE COVER ASSEMBLY |
| ADD'L | ADDITIONAL |
| A.F.F. | ABOVE FINISHED FLOOR |
| A.F.G. | ABOVE FINISHED GRADE |
| AIC | AMPERE INTERRUPTING CAPACITY |
| ALUM. | ALUMINUM |
| ALT. | ALTERNATE |
| ANT. | ANTENNA |
| APPROX. | APPROXIMATE(LY) |
| ARCH. | ARCHITECT(URAL) |
| AT. | AMPERE TRIP |
| AWG. | AMERICAN WIRE GAUGE |
| BATT. | BATTERY |
| BD. | BOARD |
| BLDG. | BUILDING |
| BLK. | BLOCK |
| BLKG. | BLOCKING |
| BM. | BEAM |
| B.N. | BOUNDARY NAILING |
| BR. | BRANCH |
| BRKR. | BREAKER |
| BTCW. | BARE TINNED COPPER WIRE |
| BTS. | BASE TRANSMISSION SYSTEM |
| B.O.F. | BOTTOM OF FOOTING |
| B/U | BACK-UP CABINET |
| C | CONDUIT |
| CAB. | CABINET |
| CANT. | CANTILEVER(ED) |
| CB. | CIRCUIT BREAKER |
| CDMA | CODE-DIVISION MULTIPLE ACCESS |
| CDUK | CONSOLIDATION DISTRIBUTION UNIT KIT |
| C.I.P. | CAST IN PLACE |
| CKT. | CIRCUIT |
| ℄ | CENTERLINE |
| CLG. | CEILING |
| CLR. | CLEAR |
| CMU | CONCRETE MASONRY UNIT |
| COL. | COLUMN |
| CONC. | CONCRETE |
| CONN. | CONNECTION(OR) |
| CONST. | CONSTRUCTION |
| CONT. | CONTINUOUS |
| d | PENNY (NAILS) |
| DBL. | DOUBLE |
| DC | DIRECT CURRENT |
| DEM. | DEMAND |
| DEPT. | DEPARTMENT |
| D.F. | DOUGLAS FIR |
| DIA. | DIAMETER |
| DIAG. | DIAGONAL |
| DIM. | DIMENSION |
| DO | DITO (THE SAME) |
| DWG. | DRAWING(S) |
| DWL. | DOWEL(S) |
| (E) | EXISTING |
| EA. | EACH |
| EGR. | EMERGENCY GENERATOR RECEPTACLE |
| EL. | ELEVATION |
| ELEC. | ELECTRICAL |
| ELEV. | ELEVATOR |
| EMT. | ELECTRICAL METALLIC TUBING |
| E.N. | EDGE NAIL |
| ENCL. | ENCLOSURE |
| ENG. | ENGINEER |
| EQ. | EQUAL |
| ESR | EVALUATION SERVICE REPORT |
| EXP. | EXPANSION |
| EXT. | EXTERIOR |
| FAB. | FABRICATION(OR) |
| FAC. | FACTOR |
| F/A | FIRE ALARM |
| F.F. | FINISH FLOOR |
| F.G. | FINISH GRADE |
| F.J. | FLOOR JOIST |
| FIN. | FINISH(ED) |
| FLR. | FLOOR |
| FLUOR | FLUORESCENT |
| FDN. | FOUNDATION |
| F.O.C. | FACE OF CONCRETE |
| F.O.M. | FACE OF MASONRY |
| F.O.S. | FACE OF STUD |
| F.O.W. | FACE OF WALL |
| FRP | FIBER REINFORCE POLYMER |
| F.S. | FINISH SURFACE |
| FT.(') | FOOT (FEET) |
| FTG. | FOOTING |
| FU | FUSE |
| G | GROUND |
| GR | GROWTH (CABINET) |
| GA. | GAUGE |
| GALV. | GALVANIZE(D) |
| GEN. | GENERATOR |
| G.F.C.I. | GROUND FAULT CIRCUIT INTERRUPTER |
| GLB. | (GLU-LAM) GLUE LAMINATED BEAM |
| GND | GROUND |
| GPS | GLOBAL POSITIONING SYSTEM |
| GRND. | GROUND |
| GSM | GLOBAL SYSTEM MOBILE |
| HDBC | HARD DRAWN COPPER WIRE |
| HDR. | HEADER |
| HGR. | HANGER |
| HPS | HIGH PRESSURE SODIUM |
| HT. | HEIGHT |
| ICC | INTERNATIONAL CODE COUNCIL |
| ICGB. | ISOLATED COPPER GROUND BUS |
| ILC | INTEGRATED LEAD CENTER |
| IN.(") | INCH(ES) |
| INT. | INTERIOR |
| L. | LONGITUDINAL) |
| LARR | LOS ANGELES RESEARCH REPORT |
| LB.(#) | POUND(S) |
| L.B. | LAG BOLTS |
| L.F. | LINEAR FEET (FOOT) |
| LG. | LENGTH |
| LPS | LOW PRESSURE SODIUM |
| LTE | LONG TERM EVOLUTION |
| MAS. | MASONRY |
| MAX. | MAXIMUM |
| M.B. | MACHINE BOLT |
| MECH. | MECHANICAL |
| MFR. | MANUFACTURER |
| MIN. | MINIMUM |
| MISC. | MISCELLANEOUS |
| MLO | MAIN LUGS ONLY |
| MTD. | MOUNTED |
| MTG. | MOUNTING |
| MTL. | METAL |
| MTS. | MANUAL TRANSFER SWITCH |
| N | NEUTRAL |
| (N) | NEW |
| NEMA | NATIONAL ELECTRICAL MANUFACTURERS ASSOC. |
| NO.(#) | NUMBER |
| N.T.S. | NOT TO SCALE |
| OBIF | OPTICAL BASEBAND INTERFACE |
| OH | OVERHEAD |
| O.C. | ON CENTER |
| OPNG. | OPENING |
| (P) | PROPOSED |
| P | POLE |
| PIC | PRECAST CONCRETE |
| PCS | PERSONAL COMMUNICATION SERVICES |
| PH | PHASE |
| PLY. | PLYWOOD |
| PNL.BD | PANELBOARD |
| PPC | POWER PROTECTION CABINET |
| PRC | PRIMARY RADIO CABINET |
| L. | PROPERTY OR PROPERTY LINE |
| PRI | PRIMARY |
| P.S.F. | POUNDS PER SQUARE FOOT |
| P.S.I. | POUNDS PER SQUARE INCH |
| P.T. | PRESSURE TREATED |
| P.T.D.F. | PRESSURE TREATED DOUGLAS FUR |
| PWR. | POWER |
| QTY. | QUANTITY |
| RAD. | RADIATION |
| R | RADIUS |
| RBS | RADIO BASE STATION |
| RCPT. | RECEPTACLE |
| REF. | REFERENCE |
| REINF. | REINFORCEMENT(ING) |
| REQ'D. | REQUIRED |
| RF | RADIO FREQUENCY |
| RGS. | RIGID GALVANIZED STEEL |
| R.J. | ROOF JOIST |
| R.R. | ROOF RAFTER |
| RRU | REMOTE RADIO UNIT (RADIO TRANSCEIVER) |
| RX-AIT | RECEIVER AIR INTERFACE TRAY |
| SAF | SAFETY |
| SAQ | SITE ACQUISITION |
| SCH. | SCHEDULE |
| SDBC | SOFT DRAWN BARE COPPER SEC SECONDARY |
| SHT. | SHEET |
| SIM. | SIMILAR |
| S.N. | SOLID NEUTRAL |
| SPEC. | SPECIFICATION(S) |
| SQ. | SQUARE |
| S.S. | STAINLESS STEEL |
| STD. | STANDARD |
| STL. | STEEL |
| STRUC. | STRUCTURAL |
| SURF | SURFACE |
| SW | SWITCH |
| TEL. | TELEPHONE |
| TEMP. | TEMPORARY |
| THK. | THICK(NESS) |
| TMA | TOWER MOUNTED AMPLIFIER (DC SUPPLY VOLTAGE) |
| T.N. | TOE NAIL |
| T.O.A. | TOP OF ANTENNA |
| T.O.C. | TOP OF CURB |
| T.O.F. | TOP OF FOUNDATION |
| T.O.P. | TOP OF PLATE OR PARAPET |
| T.O.R. | TOP OF ROOF |
| T.O.S. | TOP OF STEEL |
| T.O.W. | TOP OF WALL |
| TYP. | TYPICAL |
| U.G. | UNDER GROUND |
| U.L. | UNDERWRITERS LABORATORY INC. |
| UMTS | UNIVERSAL MOBIL TECH. SYS. |
| U.N.O. | UNLESS NOTED OTHERWISE |
| V | VOLT |
| VAC | VOLT ALTERNATING CURRENT |
| V.I.F. | VERIFY IN FIELD |
| W | WATT OR WIRE |
| WD | WIDE(WIDTH) |
| W/ | WITH |
| W/O | WITHOUT |
| WD. | WOOD |
| W.P. | WEATHERPROOF |
| WT. | WEIGHT |
| XFER | TRANSFER |
| XFMR | TRANSFORMER |
| XLPE | CROSS-LINK POLYETHYLENE |

2

## GENERAL NOTES

1. THE FACILITY IS AN UNOCCUPIED DIGITAL TELECOMMUNICATION FACILITY.
2. PLANS ARE NOT TO BE SCALED AND ARE INTENDED TO BE A DIAGRAMMATIC OUTLINE ONLY, UNLESS NOTED OTHERWISE. THE WORK SHALL INCLUDE FURNISHING MATERIALS, EQUIPMENT, APPURTENANCES AND LABOR NECESSARY TO COMPLETE ALL INSTALLATIONS AS INDICATED ON THE DRAWINGS.
3. PRIOR TO THE SUBMISSION OF BIDS, THE CONTRACTORS SHALL VISIT THE JOB SITE AND BE RESPONSIBLE FOR ALL CONTRACT DOCUMENTS, FIELD CONDITIONS AND DIMENSIONS, AND CONFIRMING THAT THE WORK MAY BE ACCOMPLISHED AS SHOWN PRIOR TO PROCEEDING WITH CONSTRUCTION. ANY DISCREPANCIES ARE TO BE BROUGHT TO THE ATTENTION OF THE IMPLEMENTATION ENGINEER AND ENGINEER PRIOR TO PROCEEDING WITH THE WORK.
4. THE CONTRACTOR SHALL OBTAIN, IN WRITING, AUTHORIZATION TO PROCEED BEFORE STARTING WORK ON ANY ITEM NOT CLEARLY DEFINED OR IDENTIFIED BY THE CONTRACT DOCUMENTS.
5. THE CONTRACTOR SHALL INSTALL ALL EQUIPMENT AND MATERIALS IN ACCORDANCE WITH MANUFACTURER'S RECOMMENDATIONS UNLESS SPECIFICALLY INDICATED OTHERWISE OR WHERE LOCAL CODES OR REGULATIONS TAKE PRECEDENCE.
6. ALL WORK PERFORMED AND MATERIALS INSTALLED SHALL BE IN STRICT ACCORDANCE WITH ALL APPLICABLE CODES, REGULATIONS AND ORDINANCES. CONTRACTOR SHALL GIVE ALL NOTICES AND COMPLY WITH ALL LAWS, ORDINANCES, RULES, REGULATIONS AND LAWFUL ORDERS OF ANY PUBLIC AUTHORITY REGARDING THE PERFORMANCE OF THE WORK. MECHANICAL AND ELECTRICAL SYSTEMS SHALL BE INSTALLED IN ACCORDANCE WITH ALL APPLICABLE MUNICIPAL AND UTILITY COMPANY SPECIFICATIONS, AND LOCAL AND STATE JURISDICTIONAL CODES, ORDINANCES AND APPLICABLE REGULATIONS.
7. THE GENERAL CONTRACTOR SHALL SUPERVISE AND DIRECT THE WORK, USING THE BEST SKILLS AND ATTENTION. THE CONTRACTOR SHALL BE SOLELY RESPONSIBLE FOR ALL CONSTRUCTION MEANS, METHODS, TECHNIQUES, SEQUENCES AND PROCEDURES AND FOR COORDINATING ALL PORTIONS OF THE WORK UNDER THE CONTRACT INCLUDING CONTACT AND COORDINATION WITH THE IMPLEMENTATION ENGINEER AND WITH THE LANDLORD'S AUTHORIZED REPRESENTATIVE.
8. SEAL PENETRATIONS THROUGH FIRE RATED AREAS WITH U.L. LISTED AND FIRE CODE APPROVED MATERIALS.
9. PROVIDE A PORTABLE FIRE EXTINGUISHER WITH A RATING OF NOT LESS THAN 2-A OR 2-A10BC WITHIN 75 FEET TRAVEL DISTANCE TO ALL PORTIONS OF THE PROJECT AREA DURING CONSTRUCTION.
10. DETAILS ARE INTENDED TO SHOW END RESULT OF DESIGN. MINOR MODIFICATIONS MAY BE REQUIRED TO SUIT JOB DIMENSIONS OR CONDITIONS, AND SUCH MODIFICATIONS SHALL BE INCLUDED AS PART OF THE WORK.
11. REPRESENTATIONS OF TRUE NORTH, OTHER THAN THOSE FOUND ON THE PLOT OF SURVEY DRAWING (SHEET LS1 OR SHEET C-1), SHALL NOT BE USED TO IDENTIFY OR ESTABLISH THE BEARING OF TRUE NORTH AT THE SITE. THE CONTRACTOR SHALL RELY SOLELY ON THE PLOT OF SURVEY DRAWING AND ANY SURVEYOR'S MARKINGS AT THE SITE FOR THE ESTABLISHMENT OF TRUE NORTH, AND SHALL NOTIFY THE ENGINEER PRIOR TO PROCEEDING WITH THE WORK IF ANY DISCREPANCY IS FOUND BETWEEN THE VARIOUS ELEMENTS OF THE WORKING DRAWINGS AND THE TRUE NORTH ORIENTATION AS DEPICTED ON THE CIVIL SURVEY. THE CONTRACTOR SHALL ASSUME SOLE LIABILITY FOR ANY FAILURE TO NOTIFY THE ENGINEER.
12. THE CONTRACTOR SHALL MAKE NECESSARY PROVISIONS TO PROTECT EXISTING IMPROVEMENTS, PAVING, CURBS, VEGETATION, GALVANIZED SURFACES, ETC., AND UPON COMPLETION OF WORK REPAIR ANY DAMAGE THAT OCCURRED DURING CONSTRUCTION TO THE SATISFACTION OF AT&T.
13. KEEP GENERAL AREA CLEAN, HAZARD FREE, AND DISPOSE OF ALL DIRT, DEBRIS, RUBBISH AND REMOVE EQUIPMENT NOT SPECIFIED AS REMAINING ON THE PROPERTY. LEAVE PREMISES IN CLEAN CONDITION AND FREE FROM PAINT SPOTS, DUST OR SMUDGES OF ANY NATURE.
14. PENETRATIONS OF ROOF MEMBRANES SHALL BE PATCHED/FLASHED AND MADE WATERTIGHT USING LIKE MATERIALS IN ACCORDANCE WITH NRCA ROOFING STANDARDS AND DETAILS. CONTRACTOR SHALL OBTAIN DETAILING CLARIFICATION FOR SITE-SPECIFIC CONDITIONS FROM ENGINEER. IF NECESSARY, BEFORE PROCEEDING.
15. BEFORE ORDERING AND/OR BEFORE FABRICATING/CONSTRUCTING/INSTALLING ANY ITEMS, VERIFY THE TYPES AND QUANTITIES.
16. CONTRACTOR SHALL PROVIDE SITE FOREMAN WITH A CELLULAR PHONE AND PAGER, AND KEEP SAME ON SITE WHENEVER PERSONNEL ARE ON SITE.
17. THE CONTRACTOR SHALL VERIFY ALL DIMENSIONS AND CONDITIONS ON THE SITE AND NOTIFY THE PROJECT MANAGER OF ANY DISCREPANCIES BEFORE STARTING ANY WORK.
18. CONTRACTOR TO PROVIDE COMPLETE SET OF AS BUILT DRAWINGS WITHIN 10 WORKING DAYS OF PROJECT COMPLETION.
19. CONTRACTOR IS TO EXCAVATE 6" BELOW EXISTING GRADE AND SPRAY WITH WEED CONTROL, REPLACE WITH CLASS II AGGREGATE BASE AND CRUSHED WASHED ROCK, AS SPECIFIED ON SITE PLAN.
20. CONTRACTOR SHALL PROVIDE TOILET FACILITY DURING ALL PHASES OF CONSTRUCTION.
21. PRIOR TO THE COMMENCEMENT OF CONSTRUCTION OR THE FABRICATION OF MATERIALS TO BE INSTALLED AT THE SITE, THE CONTRACTOR SHALL FIELD VERIFY ALL DIMENSIONS INCLUDING AS-BUILT DIMENSIONS OF EXISTING STRUCTURES OR STRUCTURAL ELEMENTS HAVING A BEARING ON THE SCOPE OF THE WORK TO BE PERFORMED. IF ANY DISCREPANCY IS FOUND BETWEEN THE VARIOUS ELEMENTS OF THE WORKING DRAWINGS AND THE DIMENSIONS OR CONDITIONS FOUND TO BE EXISTING IN THE FIELD, THE CONTRACTOR SHALL NOTIFY THE ENGINEER AND OBTAIN DESIGN RESOLUTION PRIOR TO PROCEEDING WITH THE PORTION(S) OF THE WORK AFFECTED. THE CONTRACTOR SHALL ASSUME SOLE LIABILITY FOR ANY FAILURE TO SO NOTIFY THE ENGINEER AND OBTAIN RESOLUTION BEFORE PROCEEDING.

NOTES FOR EXISTING AT&T CELL SITES:

1. PRIOR TO THE SUBMISSION OF BIDS, THE BIDDING SUBCONTRACTOR SHALL VISIT THE CELL SITE TO FAMILIARIZE WITH THE EXISTING CONDITIONS AND TO CONFIRM THAT THE WORK CAN BE ACCOMPLISHED AS SHOWN ON THE CONSTRUCTION DRAWINGS. ANY DISCREPANCY FOUND SHALL BE BROUGHT TO THE ATTENTION OF CONTRACTOR.
2. SUBCONTRACTOR SHALL VERIFY ALL EXISTING DIMENSIONS AND CONDITIONS PRIOR TO COMMENCING ANY WORK. ALL DIMENSIONS OF EXISTING CONSTRUCTION SHOWN ON THE DRAWINGS MUST BE VERIFIED. SUBCONTRACTOR SHALL NOTIFY THE CONTRACTOR OF ANY DISCREPANCIES PRIOR TO ORDERING MATERIAL OR PROCEEDING WITH CONSTRUCTION.
3. THE EXISTING CELL SITE IS IN FULL COMMERCIAL OPERATION. ANY CONSTRUCTION WORK BY SUBCONTRACTOR SHALL NOT DISRUPT THE EXISTING NORMAL OPERATION. ANY WORK ON EXISTING EQUIPMENT MUST BE COORDINATED WITH CONTRACTOR. ALSO, WORK SHOULD BE SCHEDULED FOR AN APPROPRIATE MAINTENANCE WINDOW USUALLY IN LOW TRAFFIC PERIODS AFTER MIDNIGHT.
4. SINCE THE CELL SITE IS ACTIVE, ALL SAFETY PRECAUTIONS MUST BE TAKEN WHEN WORKING AROUND HIGH LEVELS OF ELECTROMAGNETIC RADIATION. EQUIPMENT SHOULD BE SHUTDOWN PRIOR TO PERFORMING ANY WORK THAT COULD EXPOSE THE WORKERS TO DANGER. PERSONAL RF EXPOSURE MONITORS ARE ADVISED TO BE WORN TO ALERT OF ANY DANGEROUS EXPOSURE LEVELS.
5. SUBCONTRACTOR SHALL DETERMINE ACTUAL ROUTING OF CONDUIT, POWER AND T1 CABLES, GROUNDING CABLES AS SHOWN ON THE POWER, GROUNDING AND TELCO PLAN DRAWING. SUBCONTRACTOR SHALL UTILIZE EXISTING TRAYS AND/OR SHALL ADD NEW TRAYS AS NECESSARY. SUBCONTRACTOR SHALL CONFIRM THE ACTUAL ROUTING WITH THE CONTRACTOR.
6. SUBCONTRACTOR SHALL LEGALLY AND PROPERLY DISPOSE OF ALL SCRAP MATERIALS SUCH AS COAXIAL CABLES AND OTHER ITEMS REMOVED FROM THE EXISTING FACILITY. ANTENNAS REMOVED SHALL BE RETURNED TO THE OWNER'S DESIGNATED LOCATION.

1

APPLICANT:

The new at&t

1452 EDINGER AVENUE,
3RD FLOOR
TUSTIN, CA 92780

ENGINEER:

Eukon
an SFC Communications, Inc. Company
65 POST, SUITE 1000
IRVINE, CA 92618
TEL: (949) 553-8566
www.eukongroup.com



| | |
|---|---|
| DRAWN BY: | MG |
| CHECKED BY: | RB |

REVISIONS:

| REV | DATE | DESCRIPTION |
|---|---|---|
| | | |
| | | |
| | | |
| | | |
| | | |
| 3 | 06/07/24 | PLAN CHECK |
| 2 | 03/26/24 | PLAN CHECK |
| 1 | 12/20/23 | PLAN CHECK |
| 0 | 03/27/23 | 100% CONSTRUCTION DRAWING |
| B | 03/09/23 | JURISDICTION COMMENTS |
| A | 01/12/23 | 90% CONSTRUCTION DRAWING |

LICENSEE:

REGISTERED PROFESSIONAL ENGINEER
CHRIS A. LEE
78549
CIVIL
STATE OF CALIFORNIA

06/07/24

PROJECT INFORMATION:

CLL05599

1880 LOMA VISTA DR.,
GLENDALE, CA 91208

SHEET TITLE:

GENERAL NOTES, LEGEND, AND ABBREVIATIONS

SHEET NUMBER:

T-2

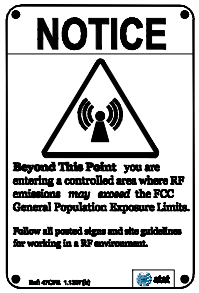



ALERTING SIGNS
NO SCALE


GENERATOR BATTERY
NO SCALE


BATTERY
NO SCALE

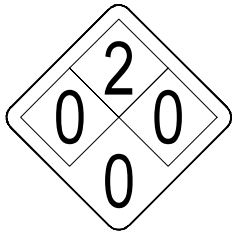


DIESEL
NO SCALE


ALERTING SIGN
NO SCALE

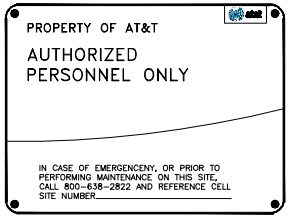


INFO SIGN #5
NO SCALE

INFO SIGN #3
NO SCALE

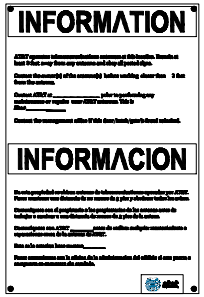


INFO SIGN #1
NO SCALE

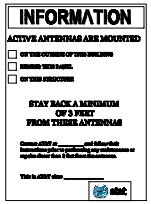


INFO SIGN #2
NO SCALE


INFO SIGN #4
NO SCALE

GENERAL SIGNAGE GUIDELINES

| Structure Type | INFO SIGN #1 | INFO SIGN #2 | INFO SIGN #3 | INFO SIGN #4 | INFO SIGN #5 | Striping | NOTICE SIGN | CAUTION SIGN |
|---|---|---|---|---|---|---|---|---|
| Towers | | | | | | | | |
| MONOPINE/Monopine/Monopalm | entrance gates, shelter doors OR on the outdoor cabinets | climbing side of the Tower | on backside of Antennas | on the side of Antennas | On the shelter door or on one outdoor equipment cabinet | | | At the height of the first climbing step, min. 9ft above ground |
| SCE Towers/Towers with high voltage | entrance gates, shelter doors OR on the outdoor cabinets | climbing side of the Tower | on backside of Antennas | on the side of Antennas | On the shelter door or on one outdoor equipment cabinet | | | At the height of the first climbing step, min. 9ft above ground |
| Light Poles/Flag Poles | entrance gates, shelter doors OR on the outdoor cabinets | on the pole, no less than 3ft below the Antenna and no | on backside of Antennas | on the side of Antennas | On the shelter door or on one outdoor equipment cabinet | | | |
| Utility Wood Poles (JPA) | entrance gates, shelter doors OR on the outdoor cabinets | on the pole, no less than 3ft below the Antenna and no | on backside of Antennas | on the side of Antennas | On the shelter door or on one outdoor equipment cabinet | | If CP max value of MPE at antenna level is: 0-99% Notice sign; over 99% Caution sign at no less that 3ft below antenna and 9ft above ground | |
| Microcells mounted on non-JPA poles | entrance gates, shelter doors OR on the outdoor cabinets | on the pole, no less than 3ft below the Antenna and no | on backside of Antennas | on the side of Antennas | On the shelter door or on one outdoor equipment cabinet | | Notice or Caution sign at no less than 9ft above ground: only if the exposure exceeds 90% of the General Public Exposure at 6ft above ground or at | |
| Roof Tops | | | | | | | | |
| At all access points to the roof | X | | | | | | | |
| On Antennas | X | | X | X | | | | |
| Concealed Antennas | X | X | | | | | | |
| antennas mounted facing outside the building | X | X | | | | | | |
| antennas on support structure | X | X | | | | | | |
| Roofview Graph: | | | | | | | | |
| Radiation area is within 3ft from antenna | X | adjacent to each antenna | | | | | either Notice or Caution sign (based on Roofview results) at antennas/barrier | |
| Radiation area is beyond 3ft from antenna | X | adjacent to each antenna | | | | diagonal, yellow striping as to Roofview graph | | |
| Church Steeples | Access to steeple | adjacent to antennas if antennas are concealed | On backside of Antennas | On the side of Antennas | On the shelter door or on one outdoor equipment cabinet | | | Caution sign at the antennas |
| Water Stations | Access to ladder | adjacent to antennas if antennas are concealed | On backside of Antennas | On the side of Antennas | On the shelter door or on one outdoor equipment cabinet | | | Caution sign beside info sign #1, min. 9ft above ground |

Notes for Rooftop sites:

1. Either NOTICE or CAUTION signs need to be posted at each sector as close as possible to: the outer edge of the striped off area of the outer antennas of the sector.
2. If Roofview shows: only blue = Notice Sign, blue and yellow = Caution Sign, only yellow = Caution sign to be installed.
3. Should the Required striping area interfere with any structures or equipment (A/C, vents, roof hatch, doors, other antennas, dishes, etc.). please notify AT&T to modify the striping area, prior to starting the work

SIGNAGE GUIDELINES CHART
NO SCALE

APPLICANT:

The new at&t

1452 EDINGER AVENUE,
3RD FLOOR
TUSTIN, CA 92780

ENGINEER:

Eukon
an SFC Communications, Inc. Company
65 POST, SUITE 1000
IRVINE, CA 92618
TEL: (949) 553-8566
www.eukongroup.com



| | |
|---|---|
| DRAWN BY: | MG |
| CHECKED BY: | RB |

REVISIONS:

| REV | DATE | DESCRIPTION |
|---|---|---|
| | | |
| | | |
| | | |
| | | |
| | | |
| 3 | 06/07/24 | PLAN CHECK |
| 2 | 03/26/24 | PLAN CHECK |
| 1 | 12/20/23 | PLAN CHECK |
| 0 | 03/27/23 | 100% CONSTRUCTION DRAWING |
| B | 03/09/23 | JURISDICTION COMMENTS |
| A | 01/12/23 | 90% CONSTRUCTION DRAWING |

LICENSEE:

REGISTERED PROFESSIONAL ENGINEER
CHRIS A. LEE
78549
CIVIL
STATE OF CALIFORNIA

06/07/24

PROJECT INFORMATION:

CLL05599

1880 LOMA VISTA DR.,
GLENDALE, CA 91208

SHEET TITLE:

GENERAL SIGNAGE

SHEET NUMBER:

T-3

# STATEMENT OF SPECIAL INSPECTIONS

| NO. | DESCRIPTION OF TYPE OF INSPECTION REQUIRED, LOCATION, REMARKS. | DESIGN STRENGTH | FREQUENCY |
|---|---|---|---|
| 1 | ANCHORS: | | |
| | ADHESIVE AND EXPANSION ANCHORS IN CONCRETE OR MASONRY. HILTI KWIK BOLT TZ2 EXPANSION ANCHOR, PER ICC REPORT ESR-4266. | | PERIODIC |
| | ADHESIVE AND EXPANSION ANCHORS IN CONCRETE OR MASONRY. INSPECTOR SHALL VERIFY ANCHOR TYPE, ANCHOR DIMENSIONS, | | |
| | CONCRETE TYPE, THICKNESS AND COMPRESSIVE STRENGTH, HOLED DIMENSTIONS, HOLE CLEANING PROCEDURES, ANCHOR SPACING, | | |
| | EDGE DISTANCES, ANCHOR EMBEDMENT, AND TIGHTENING TORQUE. | | |
| | | | |
| 2 | CONCRETE: | | |
| A | CONTINUOUS INSPECTION AND TEST CYLINDERS FOR STRUCTURAL CONCRETE EXCEPT FOUNDATION CONCRETE OF 2500 PSI OR LESS | | CONTINUOUS |
| | AND SPECIFIED EXCEPTIONS PER SECTION 1705.3 (TABLE 1705.3). | | |
| B | CONTINUOUS SPECIAL INSPECTION OF DRILLING OPERATION FOR PIER FOUNDATIONS. | | |
| C | CONTINUOUS SPECIAL INSPECTION TO VERIFY LOCATION, PLUMBNESS, DIAMETER, AND LENGTH OF PIER FOUNDATIONS. | | |
| D | CONTINUOUS SPECIAL INSPECTION OF ANCHOR BOLTS PRIOR TO AND DURING CONCRETE PLACEMENT. | | |
| E | CONTINUOUS SPECIAL INSPECTION OF CONCRETE PLACEMENT. | | |
| F | CONTINUOUS SPECIAL INSPECTION OF DRILLING OPERATION FOR PIER FOUNDATIONS. | | |
| | | | |
| 3 | REINFORCING STEEL: | | |
| A | PLACING OF REINFORCING PER SECTION 1705.3 (TABLE 1705.3). | | |
| B | PERIODIC SPECIAL INSPECTION OF PLACEMENT OF REINFORCEMENT STEEL | | PERIODIC |
| | | | |
| 4 | HIGH STRENGTH BOLTING: | | |
| A | PERIODIC SPECIAL INSPECTION OF HIGH-STRENGTH BOLTING | | |
| | | | |
| 5 | MASONRY: | | |
| A | LEVEL 1 SPECIAL INSPECTION IS REQUIRED FOR MASONRY IN ACCORDANCE WITH CODE SECTION 1705.4. | | |
| | | | PERIODIC |
| 6 | WELDING: | | |
| | NO FIELD WELDING SHALL BE PERMITTED. STEEL FABRICATION SHALL BE DONE ON THE PREMISES OF A FABRICATOR REGISTERED | | |
| | AND APPROVED TO PERFORM SUCH WORK WITHOUT SPECIAL INSPECTION. | | |
| | | | |
| | | | |
| | | | |
| | | | |

SPECIAL INSPECTION NOTES:

1. THE SPECIAL INSPECTIONS IDENTIFIED ON PLANS ARE, IN ADDITION TO, AND NOT A SUBSTITUTE FOR, THOSE INSPECTIONS REQUIRED TO BE PERFORMED BY A CITY'S BUILDING INSPECTOR.

2. CONTINUOUS INSPECTION IS ALWAYS REQUIRED DURING THE PERFORMANCE OF THE WORK UNLESS OTHERWISE SPECIFIED. WHEN WORK IN MORE THAN ONE CATEGORY OF WORK REQUIRING SPECIAL INSPECTION IS TO BE PERFORMED SIMULTANEOUSLY, OR THE GEOGRAPHIC LOCATION OF THE WORK IS SUCH THAT IT CANNOT BE CONTINUOUSLY OBSERVED IN ACCORDANCE WITH THE PROVISIONS OF CBC SECTION 1704, IT IS THE AGENT'S RESPONSIBILITY TO EMPLOY A SUFFICIENT NUMBER OF INSPECTORS TO ASSURE THAT ALL THE WORK IS INSPECTED IN ACCORDANCE WITH THOSE PROVISIONS.

3. THE SPECIAL INSPECTORS MUST BE CERTIFIED BY THE AUTHORITY HAVING JURISDICTION, IN THE CATEGORY OF WORK REQUIRED TO HAVE SPECIAL INSPECTION.

4. IT IS THE RESPONSIBILITY OF THE CONTRACTOR TO NOTIFY THE SPECIAL INSPECTOR OR INSPECTION AGENCY AT LEAST ONE WORKING DAY PRIOR TO PERFORMING ANY WORK THAT REQUIRES SPECIAL INSPECTION.

5. NOTICE TO THE CONTRACTOR: BY USING THIS PERMITTED CONSTRUCTION DRAWINGS FOR CONSTRUCTION/INSTALLATION OF THE WORK SPECIFIED HEREIN, YOU AGREE TO COMPLY WITH THE REQUIREMENTS OF THE AUTHORITY HAVING JURISDICTION FOR SPECIAL INSPECTIONS, STRUCTURAL OBSERVATIONS, CONSTRUCTION MATERIAL TESTING AND OFF-SITE FABRICATION OF BUILDING COMPONENTS, CONTAINED IN THE STATEMENT OF SPECIAL INSPECTIONS AND, AS REQUIRED BY THE CALIFORNIA CONSTRUCTION CODES.

6. NOTICE TO THE CONTRACTOR/BUILDER/INSTALLER/SUB-CONTRACTOR/ OWNER-BUILDER: BY USING THIS PERMITTED CONSTRUCTION DRAWINGS FOR CONSTRUCTION/INSTALLATION OF THE WORK SPECIFIED HEREIN, YOU ACKNOWLEDGE AND ARE AWARE OF, THE REQUIREMENTS CONTAINED IN THE STATEMENT OF SPECIAL INSPECTIONS. YOU AGREE TO COMPLY WITH THE REQUIREMENTS OF THE AUTHORITY HAVING JURISDICTION FOR SPECIAL INSPECTIONS, STRUCTURAL OBSERVATIONS, CONSTRUCTION MATERIAL TESTING AND OFF-SITE FABRICATION OF BUILDING COMPONENTS, CONTAINED IN THE STATEMENT OF SPECIAL INSPECTIONS AND, AS REQUIRED BY THE CALIFORNIA CONSTRUCTION CODES.

7. THE CONSTRUCTION MATERIALS TESTING LABORATORY MUST BE APPROVED BY THE AUTHORITY HAVING JURISDICTION, FOR TESTING OF MATERIALS, SYSTEMS, COMPONENTS AND, EQUIPMENTS.

8. WORK REQUIRING SPECIAL INSPECTION THAT IS INSTALLED OR COVERED WITHOUT THE APPROVAL OF THE CITY INPSECTOR IS SUBJECT TO REMOVAL OR EXPOSURE AT NO COST TO THE GOVERNING JURISDICTION.

APPLICANT:

The new at&t

1452 EDINGER AVENUE,
3RD FLOOR
TUSTIN, CA 92780

ENGINEER:

Eukon
an SFC Communications, Inc. Company
65 POST, SUITE 1000
IRVINE, CA 92618
TEL: (949) 553-8566
www.eukongroup.com



| | |
|---|---|
| DRAWN BY: | MG |
| CHECKED BY: | RB |

REVISIONS:

| REV | DATE | DESCRIPTION |
|---|---|---|
| | | |
| | | |
| | | |
| | | |
| | | |
| 3 | 06/07/24 | PLAN CHECK |
| 2 | 03/26/24 | PLAN CHECK |
| 1 | 12/20/23 | PLAN CHECK |
| 0 | 03/27/23 | 100% CONSTRUCTION DRAWING |
| B | 03/09/23 | JURISDICTION COMMENTS |
| A | 01/12/23 | 90% CONSTRUCTION DRAWING |

LICENSEE:

REGISTERED PROFESSIONAL ENGINEER
CHRIS A. LEE
78549
CIVIL
STATE OF CALIFORNIA

06/07/24

PROJECT INFORMATION:

CLL05599

1880 LOMA VISTA DR.,
GLENDALE, CA 91208

SHEET TITLE:

STATEMENT OF SPECIAL INSPECTIONS

SHEET NUMBER:

T-4

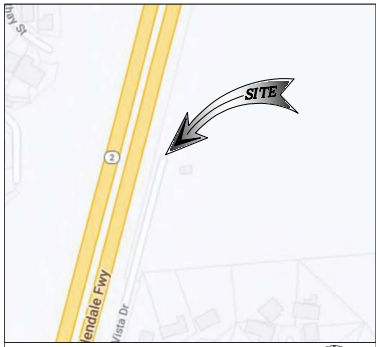


VICINITY MAP

## APN
5659-015-904

## SITE ADDRESS
1880 LOMA VISTA DR., GLENDALE, CA 91208

## TITLE REPORT
NO TITLE REPORT HAS BEEN ISSUED DURING THE TIME OF SURVEY

## BASIS OF BEARING
BEARINGS SHOWN HEREON ARE BASED UPON U.S. STATE PLANE NAD83 COORDINATE SYSTEM CALIFORNIA STATE PLANE COORDINATE ZONE FIVE, DETERMINED BY GPS OBSERVATIONS.

## BENCHMARK
ELEVATIONS ARE BASED ON CRTN (CSRC) NETWORK BROADCAST COORDINATES.

## FLOODZONE
SITE IS LOCATED IN FLOOD ZONE "X" AS PER F.I.R.M. MAP NO. 06037C1375F EFFECTIVE DATE 09/26/2008.

NOTES:

1. THIS IS NOT A BOUNDARY SURVEY. THIS IS A SPECIALIZED TOPOGRAPHIC MAP. THE PROPERTY LINES AND EASEMENTS SHOWN HEREON ARE FROM RECORD INFORMATION AS NOTED HEREON. CELLSITE CONCEPTS TRANSLATED THE TOPOGRAPHIC SURVEY TO RECORD INFORMATION USING FOUND MONUMENTS SHOWN HEREON. THE LOCATION OF PROPERTY LINES SHOWN HEREON ARE APPROXIMATE AND FOR INFORMATIONAL PURPOSES ONLY. THEY ARE NOT TO BE RELIED UPON AS THE ACTUAL BOUNDARY LINES.
2. ANY CHANGES MADE TO THE INFORMATION ON THIS PLAN, WITHOUT THE WRITTEN CONSENT OF CELLSITE CONCEPTS, RELIEVES CELLSITE CONCEPTS OF ANY AND ALL LIABILITY.
3. THE HEIGHTS AND ELEVATIONS FOR THE TREES, BUSHES AND OTHER LIVING PLANTS SHOWN HEREON, SHOULD BE CONSIDERED APPROXIMATE (+/-) AND ONLY FOR THE DATE OF THIS SURVEY. THEY ARE PROVIDED AS A GENERAL REFERENCE AND SHOULD NOT BE USED FOR DESIGN PURPOSES.
4. WRITTEN DIMENSIONS SHALL TAKE PREFERENCE OVER SCALED & SHALL BE VERIFIED ON THE JOB SITE. ANY DISCREPANCY SHALL BE BROUGHT TO THE NOTICE OF THE SURVEYOR PRIOR TO COMMENCEMENT OF ANY WORK.
5. FIELD SURVEY COMPLETED ON APRIL 08, 2022

## LEGEND

| | |
|---|---|
| | CENTER LINE |
| | PROPERTY LINE |
| | CHAIN-LINK FENCE |
| | WOOD FENCE |
| | CMU WALL |
| EG | EXISTING GRADE |
| FS | FINISH SURFACE |
| LP | LIP OF GUTTER |
| FL | FLOW LINE |
| TC | TOP OF CURB |
| TW | TOP OF WALL |
| TP | TOP OF POLE |
| TT | TOP OF TREE |
| | EXISTING STREET LIGHT |
| | FIRE HYDRANT |
| | TREE |
| | BUSH |

## COORDINATES

NEW AT&T EQUIPMENT FACILITY

LATITUDE: 34°10'31.14"N (34.175317)

LONGITUDE: 118°13'15.4"W (-118.220944)

PROPERTY LINES DERIVED FROM

| | |
|---|---|
| MAP OF THE VERDUGO ESTATE BK. 34 PG. 73-76 | DATED FEBRUARY 25, 1907 |
| TRACT MAP NO. 26437 BK. 680 PG 29-30 | DATED DECEMBER 06, 1961 |
| PARCEL MAP GLN. NO. 1354-A BK. 121 PG. 1 | DATED DECEMBER 13, 1974 |

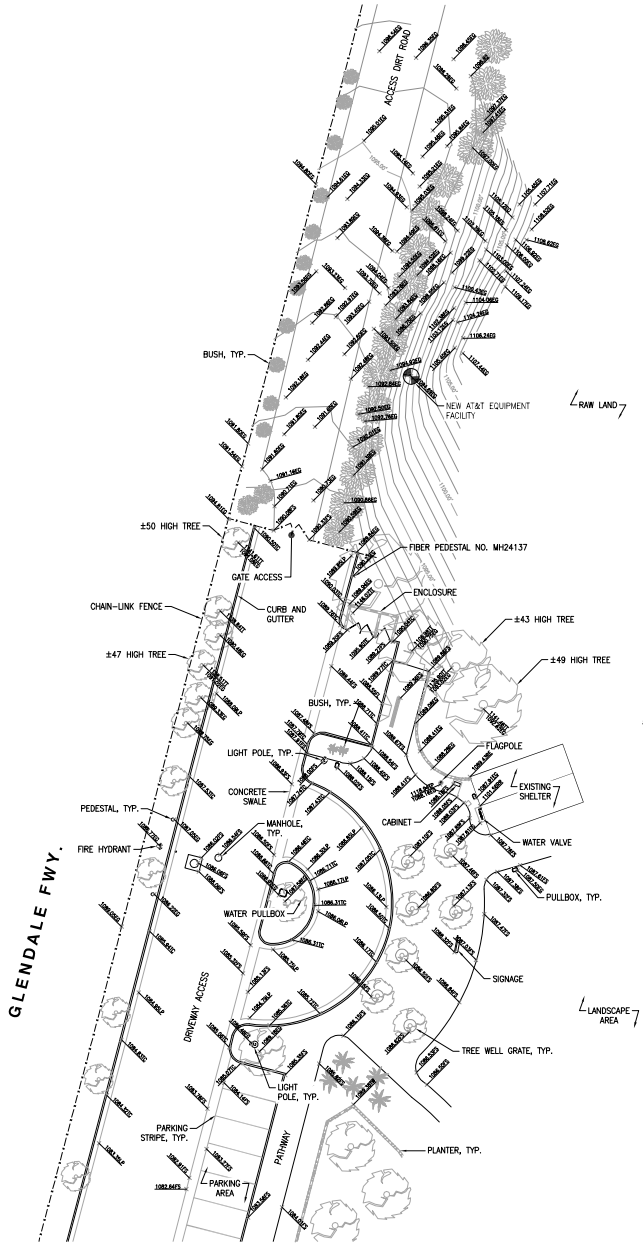


APN
5659-015-904

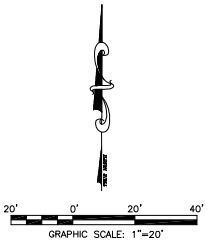



at&t
1452 EDINGER AVENUE
TUSTIN, CA 92780

Eukon
an SFC Communications, Inc. Company
65 POST, SUITE 1000
IRVINE, CA 92618
TEL: (949) 553-8566
www.eukongroup.com

cellsite concepts
16885 VIA DEL CAMPO CT., SUITE 318
SAN DIEGO, CA 92127
tel: (858) 432-4112 / (858) 432-4257


| REV | DATE | DESCRIPTION |
|---|---|---|
| 4 | 05/02/2023 | REVISED ADDRESS |
| 3 | 02/02/2022 | ADDED TREE HEIGHT |
| 2 | 07/11/2022 | FINAL SURVEY |
| 1 | 04/15/2022 | PRELIMINARY SURVEY |

ISSUED DATE:
MAY 2, 2023

ISSUED FOR:
FINAL SURVEY

LICENSURE:
LICENSED LAND SURVEYOR RAFI Y. HANA L.S. 8780 Exp. 12/31/24 STATE OF CALIFORNIA

PROJECT INFORMATION:
CLL05599
1880 LOMA VISTA DR., GLENDALE, CA 91208

DRAWN BY: VNS
CHECKED BY: RH

SHEET TITLE:
TOPOGRAPHIC SURVEY

SHEET NUMBER:
LS-1

NOTES:
THIS SITE PLAN IS NOT INTENDED TO BE A LAND SURVEY.

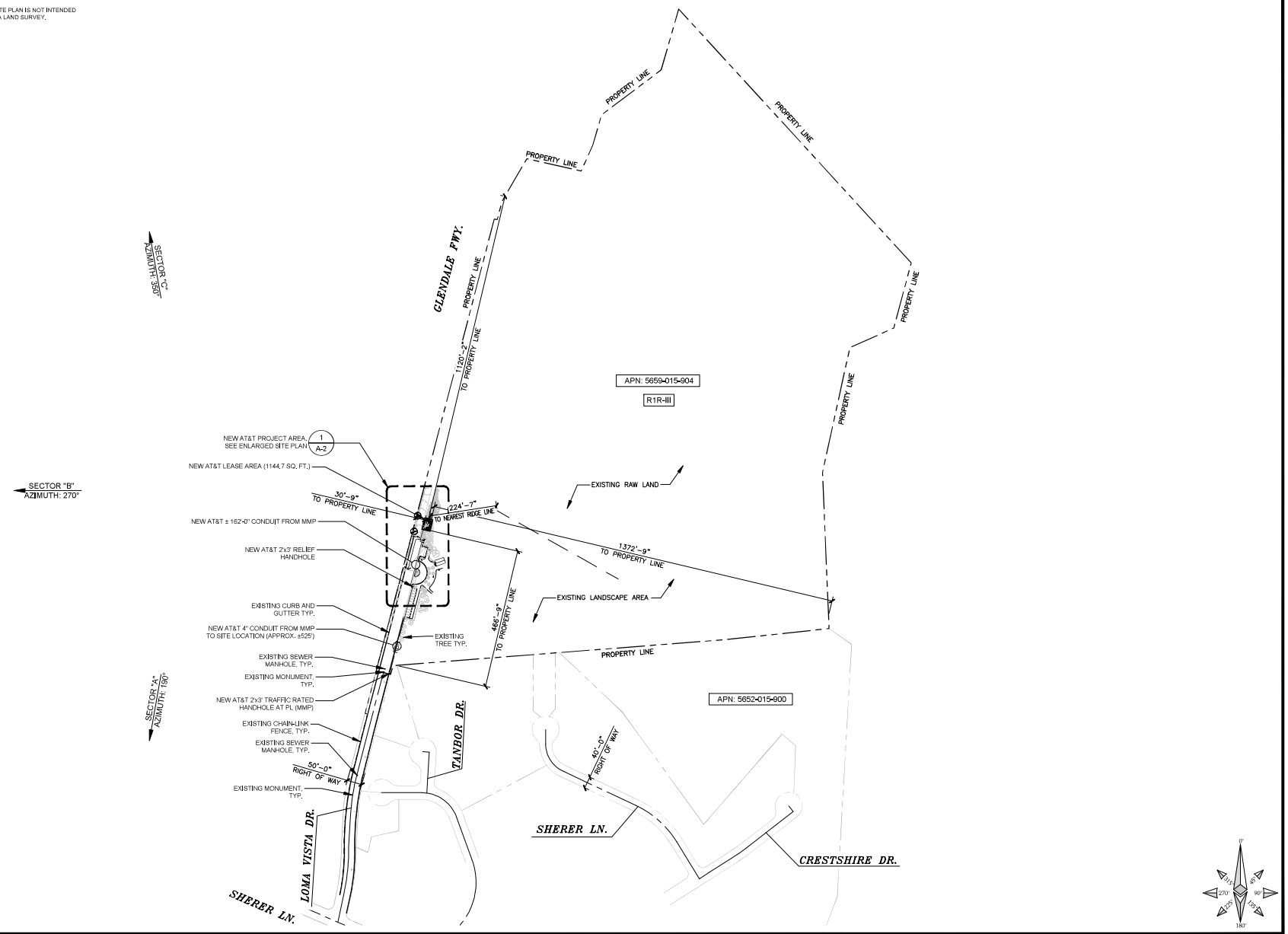


SITE PLAN

| SCALE | |
|---|---|
| 1"=150'-0" | 150' 0 75' 150' 300' 600' |

1

APPLICANT:

The new at&t

1452 EDINGER AVENUE,
3RD FLOOR
TUSTIN, CA 92780

ENGINEER:

Eukon
an SFC Communications, Inc. Company
65 POST, SUITE 1000
IRVINE, CA 92618
TEL: (949) 553-8566
www.eukongroup.com

THIS PAGE CONTAINS CONFIDENTIAL, PROPRIETARY OR TRADE SECRET INFORMATION EXEMPT FROM DISCLOSURE UNDER APPLICABLE LAW.

| | |
|---|---|
| DRAWN BY: | MG |
| CHECKED BY: | RB |

REVISIONS:

| REV | DATE | DESCRIPTION |
|---|---|---|
| | | |
| | | |
| | | |
| | | |
| | | |
| 3 | 06/07/24 | PLAN CHECK |
| 2 | 03/26/24 | PLAN CHECK |
| 1 | 12/20/23 | PLAN CHECK |
| 0 | 03/27/23 | 100% CONSTRUCTION DRAWING |
| B | 03/09/23 | JURISDICTION COMMENTS |
| A | 01/12/23 | 90% CONSTRUCTION DRAWING |

LICENSEE:

REGISTERED PROFESSIONAL ENGINEER
CHRIS A. LEE
78549
CIVIL
STATE OF CALIFORNIA

06/07/24

PROJECT INFORMATION:

CLL05599

1880 LOMA VISTA DR.,
GLENDALE, CA 91208

SHEET TITLE:

SITE PLAN

SHEET NUMBER:

A-1

NOTES:
THIS SITE PLAN IS NOT INTENDED TO BE A LAND SURVEY.

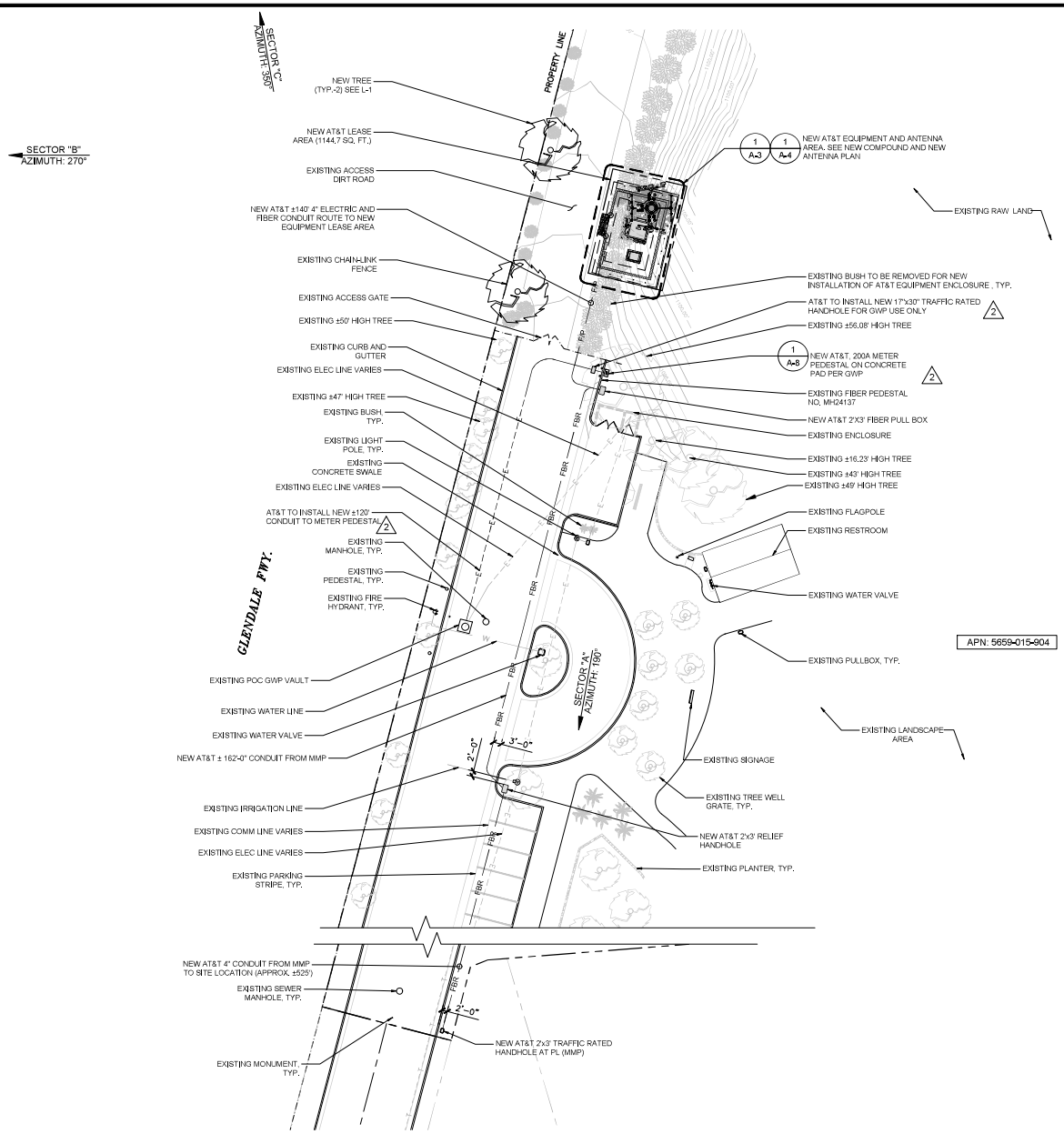


ENLARGED SITE PLAN

SCALE 1"=20'-0"

20' 0 10' 20' 40' 80'

1

APPLICANT:

The new at&t

1452 EDINGER AVENUE,
3RD FLOOR
TUSTIN, CA 92780

ENGINEER:

Eukon
an SFC Communications, Inc. Company
65 POST, SUITE 1000
IRVINE, CA 92618
TEL: (949) 553-8566
www.eukongroup.com

THIS PAGE CONTAINS CONFIDENTIAL, PROPRIETARY OR TRADE SECRET INFORMATION EXEMPT FROM DISCLOSURE UNDER APPLICABLE LAW.

| | |
|---|---|
| DRAWN BY: | MG |
| CHECKED BY: | RB |

REVISIONS:

| REV | DATE | DESCRIPTION |
|---|---|---|
| | | |
| | | |
| | | |
| | | |
| | | |
| 3 | 06/07/24 | PLAN CHECK |
| 2 | 03/26/24 | PLAN CHECK |
| 1 | 12/20/23 | PLAN CHECK |
| 0 | 03/27/23 | 100% CONSTRUCTION DRAWING |
| B | 03/09/23 | JURISDICTION COMMENTS |
| A | 01/12/23 | 90% CONSTRUCTION DRAWING |

LICENSEE:

REGISTERED PROFESSIONAL ENGINEER
CHRIS A. LEE
78549
CIVIL
STATE OF CALIFORNIA

06/07/24

PROJECT INFORMATION:

CLL05599

1880 LOMA VISTA DR.,
GLENDALE, CA 91208

SHEET TITLE:

ENLARGED SITE PLAN

SHEET NUMBER:

A-1.1

NOTES:
THIS SITE PLAN IS NOT INTENDED TO BE A LAND SURVEY.

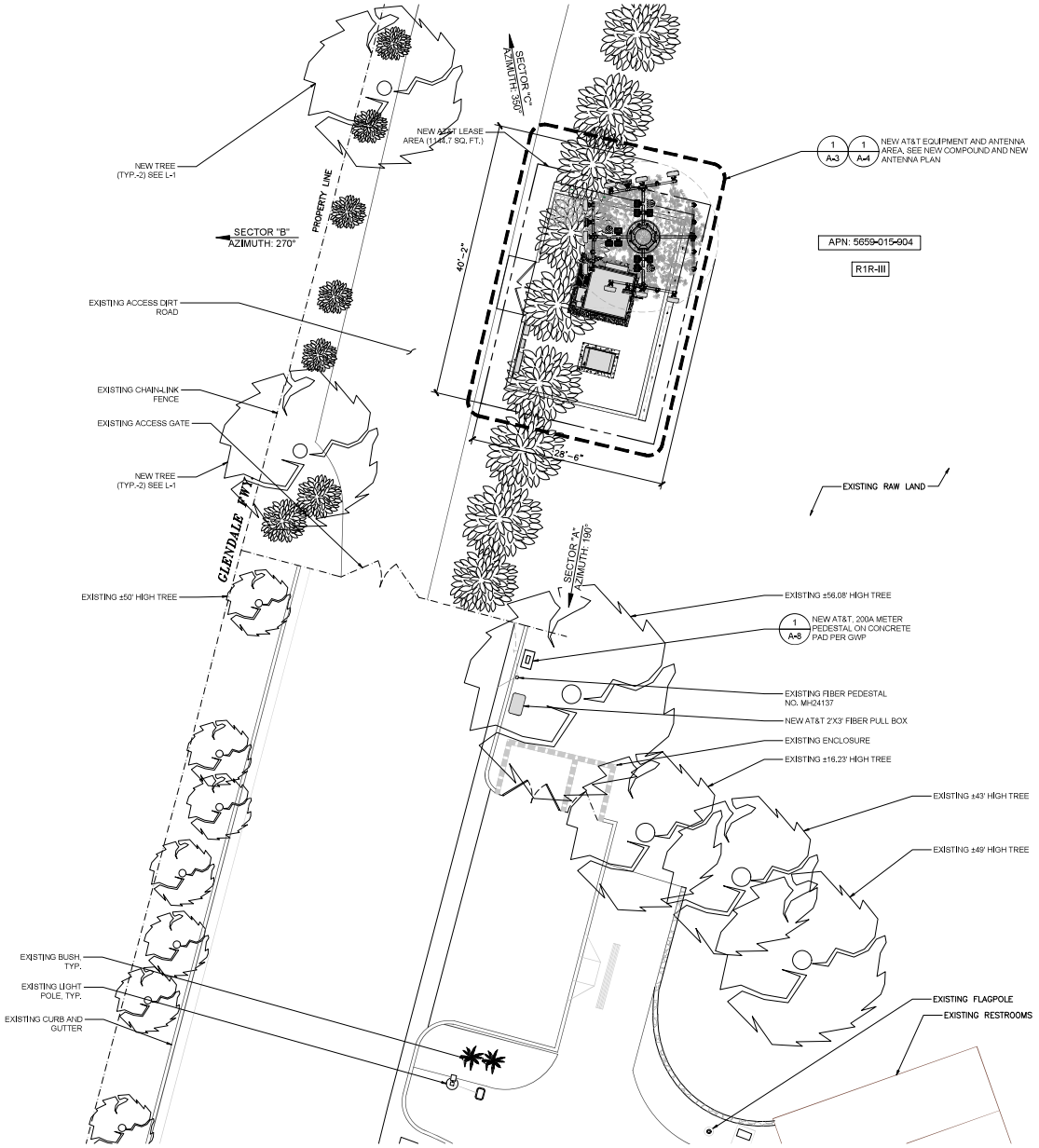


PARTIAL SITE PLAN

SCALE 1/8"=1'-0"

8' 0 4' 8' 16' 32'

1

APPLICANT:

The new at&t

1452 EDINGER AVENUE,
3RD FLOOR
TUSTIN, CA 92780

ENGINEER:

Eukon
an SFC Communications, Inc. Company
65 POST, SUITE 1000
IRVINE, CA 92618
TEL: (949) 553-8566
www.eukongroup.com

THIS PAGE CONTAINS CONFIDENTIAL, PROPRIETARY OR TRADE SECRET INFORMATION EXEMPT FROM DISCLOSURE UNDER APPLICABLE LAW.

| | |
|---|---|
| DRAWN BY: | MG |
| CHECKED BY: | RB |

REVISIONS:

| REV | DATE | DESCRIPTION |
|---|---|---|
| 3 | 06/07/24 | PLAN CHECK |
| 2 | 03/26/24 | PLAN CHECK |
| 1 | 12/20/23 | PLAN CHECK |
| 0 | 03/27/23 | 100% CONSTRUCTION DRAWING |
| B | 03/09/23 | JURISDICTION COMMENTS |
| A | 01/12/23 | 90% CONSTRUCTION DRAWING |

LICENSEE:

REGISTERED PROFESSIONAL ENGINEER CHRIS A. LEE 78549 CIVIL STATE OF CALIFORNIA

06/07/24

PROJECT INFORMATION:

CLL05599

1880 LOMA VISTA DR.,
GLENDALE, CA 91208

SHEET TITLE:

PARTIAL SITE PLAN

SHEET NUMBER:

A-2

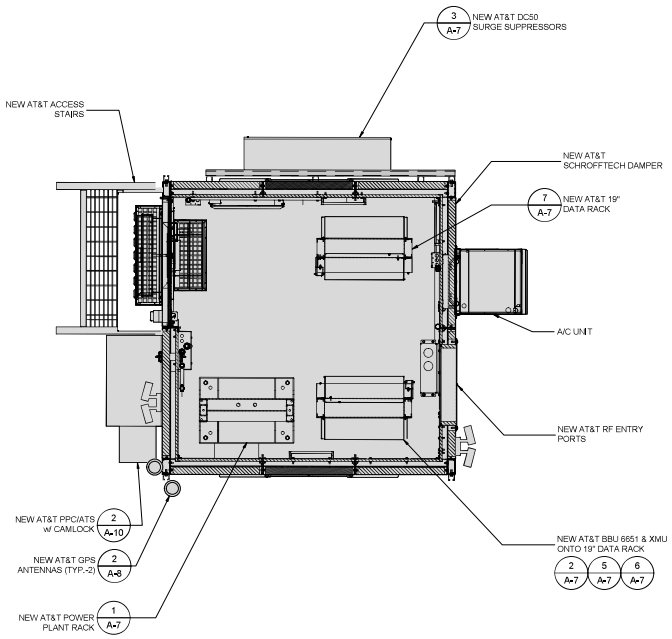


**NEW EQUIPMENT LAYOUT-STEEL WIC.** SCALE 3/4"=1'-0" 2

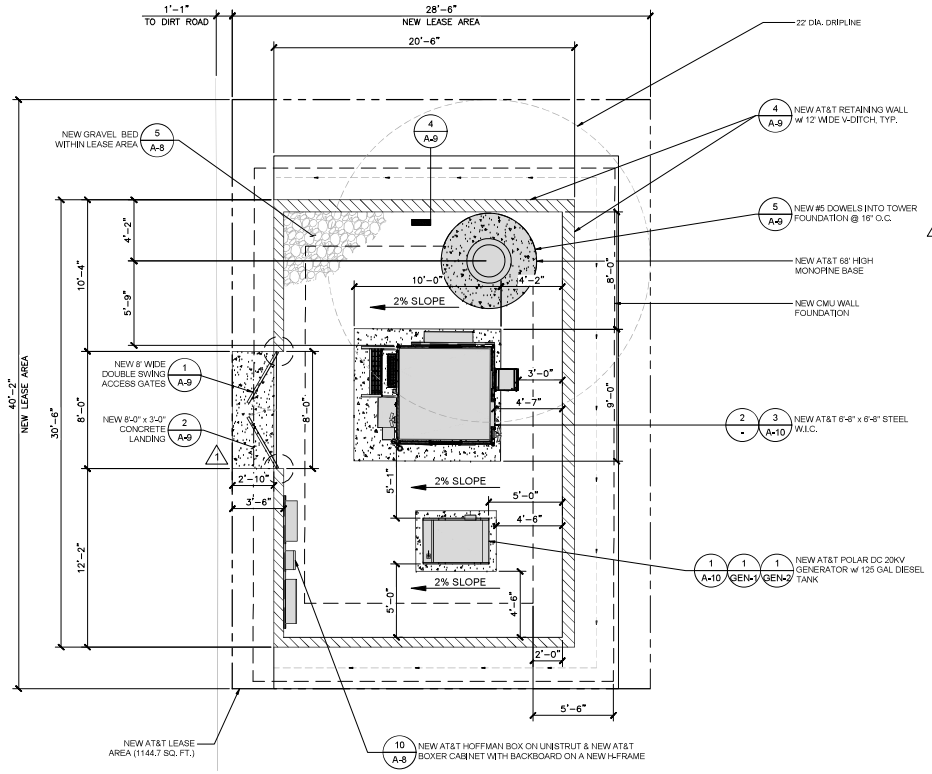


**NEW COMPOUND LAYOUT** SCALE 1/4"=1'-0" 1

APPLICANT:

The new at&t

1452 EDINGER AVENUE,
3RD FLOOR
TUSTIN, CA 92780

ENGINEER:

Eukon
an SFC Communications, Inc. Company
65 POST, SUITE 1000
IRVINE, CA 92618
TEL: (949) 553-8566
www.eukongroup.com

THIS PAGE CONTAINS CONFIDENTIAL, PROPRIETARY OR TRADE SECRET INFORMATION EXEMPT FROM DISCLOSURE UNDER APPLICABLE LAW.

| | |
|---|---|
| DRAWN BY: | MG |
| CHECKED BY: | RB |

REVISIONS:

| REV | DATE | DESCRIPTION |
|---|---|---|
| 3 | 06/07/24 | PLAN CHECK |
| 2 | 03/26/24 | PLAN CHECK |
| 1 | 12/20/23 | PLAN CHECK |
| 0 | 03/27/23 | 100% CONSTRUCTION DRAWING |
| B | 03/09/23 | JURISDICTION COMMENTS |
| A | 01/12/23 | 90% CONSTRUCTION DRAWING |

LICENSEE:

REGISTERED PROFESSIONAL ENGINEER CHRIS B. LEE 78549 CIVIL STATE OF CALIFORNIA

06/07/24

PROJECT INFORMATION:

CLL05599

1880 LOMA VISTA DR.,
GLENDALE, CA 91208

SHEET TITLE:

NEW COMPOUND / EQUIPMENT LAYOUT

SHEET NUMBER:

A-3

| | OPTIMUM ANTENNA REQUIREMENTS (VERIFY WITH CURRENT RFDS) | | | | | | | |
|---|---|---|---|---|---|---|---|---|
| | SECTOR | TECHNOLOGY | ANTENNA MODEL | ANTENNA SIZE | ANTENNA AZIMUTH | RAD CENTER | TRANSMISSION CABLE | |
| | | | | | | | LENGTH | NUMBER |
| ALPHA SECTOR | A1 | LTE | COMMSCOPE NNH4-45B-R6 | 6' | 190° | 60'-0" | ±100' | 2 FIBER |
| | A2 | LTE | COMMSCOPE NNH4-45B-R6 | 6' | 190° | 60'-0" | ±100' | 2 FIBER |
| | A3 | LTE | COMMSCOPE NNH4-45B-R6 | 6' | 190° | 60'-0" | ±100' | 2 FIBER |
| | A4 | C-BAND | ERICSSON AIR 6449 B77D | 31" | 190° | 52'-9" | ±100' | 2 FIBER |
| | | | | | | | | |
| BETA SECTOR | B1 | LTE | COMMSCOPE NNH4-45B-R6 | 6' | 270° | 60'-0" | ±100' | 2 FIBER |
| | B2 | LTE | COMMSCOPE NNH4-45B-R6 | 6' | 270° | 60'-0" | ±100' | 2 FIBER |
| | B3 | LTE | COMMSCOPE NNH4-45B-R6 | 6' | 270° | 60'-0" | ±100' | 2 FIBER |
| | B4 | C-BAND | ERICSSON AIR 6449 B77D | 31" | 270° | 52'-9" | ±100' | 2 FIBER |
| | | | | | | | | |
| GAMMA SECTOR | C1 | LTE | COMMSCOPE NNH4-45B-R6 | 6' | 350° | 60'-0" | ±100' | 2 FIBER |
| | C2 | LTE | COMMSCOPE NNH4-45B-R6 | 6' | 350° | 60'-0" | ±100' | 2 FIBER |
| | C3 | LTE | COMMSCOPE NNH4-45B-R6 | 6' | 350° | 60'-0" | ±100' | 2 FIBER |
| | C4 | C-BAND | ERICSSON AIR 6449 B77D | 31" | 350° | 52'-9" | ±100' | 2 FIBER |
| | - | - | - | - | - | - | - | - |

NOTES TO CONTRACTOR

1. CONTRACTOR IS TO REFER TO AT&T'S MOST CURRENT RADIO FREQUENCY DATA SHEET (RFDS) PRIOR TO CONSTRUCTION.
2. CABLE LENGTHS WERE DETERMINED BASED ON A VISUAL INSPECTION DURING SITE WALK. CONTRACTOR TO VERIFY ACTUAL LENGTH DURING PRE-CONSTRUCTION WALK.
3. CONTRACTOR TO USE ROSENBERGER FIBER LINE HANGER COMPONENTS (OR ENGINEER APPROVED EQUAL).
4. CONTRACTOR TO USE CABLES SPECIFIED (OR ENGINEER APPROVED EQUAL).

| | REMOTE RADIO UNITS | | | | | |
|---|---|---|---|---|---|---|
| | SECTOR | RRU TYPE | RRU LOCATION (DISTANCE FROM ANTENNA) | MINIMUM CLEARANCES | | |
| | | | | ABOVE | BELOW | SIDES |
| ALPHA SECTOR | A1 | ERICSSON RRU-4449 B5/B12 | ±15' | 16" | 8" | 0" |
| | A1 | ERICSSON RRU-8843 B2/B66A | ±15' | 16" | 8" | 0" |
| | A1 | - | - | - | - | - |
| | A1 | - | - | - | - | - |
| | A2 | ERICSSON RRU-4478 B14 | ±15' | 16" | 8" | 0" |
| | A2 | - | - | | - | - |
| | A3 | ERICSSON RRU-2012 B29 | ±15' | 16" | 8" | 0" |
| | A3 | - | - | - | - | - |
| | A3 | - | - | - | - | - |
| | A4 | - | - | - | - | - |
| | A4 | - | - | - | - | - |
| | A4 | | | | | |
| BETA SECTOR | B1 | ERICSSON RRU-4449 B5/B12 | ±15' | 16" | 8" | 0" |
| | B1 | ERICSSON RRU-8843 B2/B66A | ±15' | 16" | 8" | 0" |
| | B1 | - | - | - | - | - |
| | B2 | - | - | - | - | - |
| | B2 | ERICSSON RRU-4478 B14 | ±15' | 16" | 8" | 0" |
| | B2 | - | - | | - | - |
| | B3 | ERICSSON RRU-2012 B29 | ±15' | 16" | 8" | 0" |
| | B3 | - | - | - | - | - |
| | B3 | - | - | - | - | - |
| | B4 | - | - | - | - | - |
| | B4 | - | - | - | - | - |
| | B4 | | | | | |
| GAMMA SECTOR | C1 | ERICSSON RRU-4449 B5/B12 | ±15' | 16" | 8" | 0" |
| | C1 | ERICSSON RRU-8843 B2/B66A | ±15' | 16" | 8" | 0" |
| | C1 | - | - | - | - | - |
| | C2 | - | - | - | - | - |
| | C2 | ERICSSON RRU-4478 B14 | ±15' | 16" | 8" | 0" |
| | C2 | - | - | | - | - |
| | C3 | ERICSSON RRU-2012 B29 | ±15' | 16" | 8" | 0" |
| | C3 | - | - | - | - | - |
| | C3 | - | - | - | - | - |
| | C4 | - | - | - | - | - |
| | C4 | - | - | - | - | - |

| | SURGE SUPPRESSION SYSTEM | | | |
|---|---|---|---|---|
| SYSTEM | MANUFACTURER | PART NUMBER | QTY | LOCATION |
| | RAYCAP | DC50-48-60-96-50F CRD | 1 | MOUNTED ON NEW STEEL W.I.C. |
| | RAYCAP | DC9-48-60-24-8C-EV | 3 | MOUNTED ON NEW MONOPINE TOWER |

ANTENNA AND RRU SCHEDULE | 2

SCALE NOTE:
IF DIMENSIONS SHOWN ON PLAN DO NOT SCALE CORRECTLY, CHECK FOR REDUCTION OR ENLARGEMENT FROM ORIGINAL PLANS.

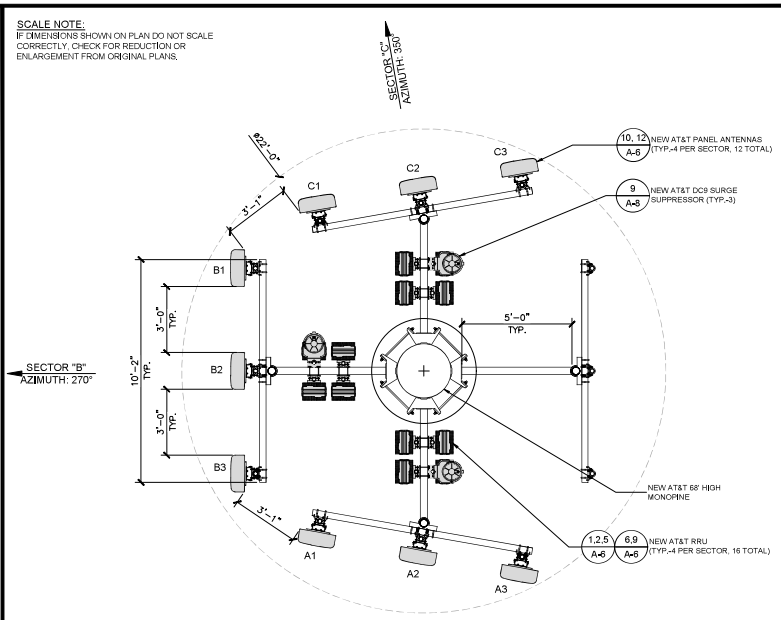


UPPER ANTENNAS AT RAD CENTER 60'-0"

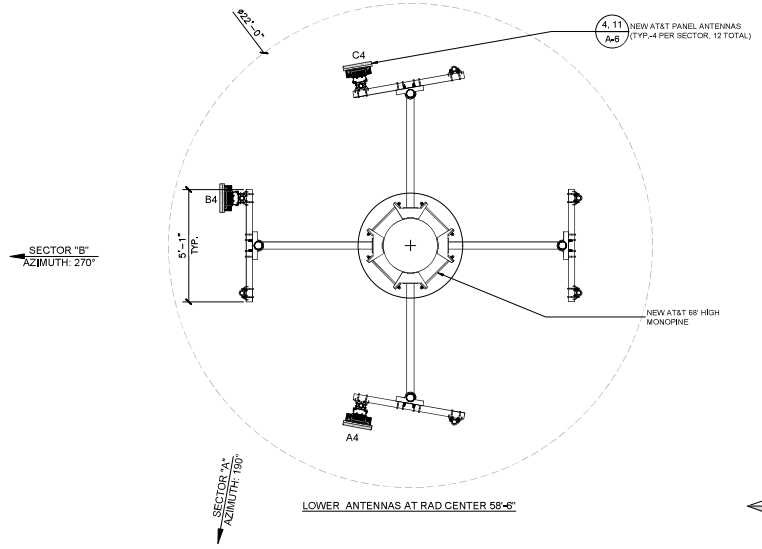


LOWER ANTENNAS AT RAD CENTER 58'-6"

NEW ANTENNA PLAN | SCALE 1/2"=1'-0" | 2' 0 1' 2' 4' 8' | 1

APPLICANT:

The new at&t
1452 EDINGER AVENUE,
3RD FLOOR
TUSTIN, CA 92780

ENGINEER:

Eukon
an SFC Communications, Inc. Company
65 POST, SUITE 1000
IRVINE, CA 92618
TEL: (949) 553-8566
www.eukongroup.com



| | |
|---|---|
| DRAWN BY: | MG |
| CHECKED BY: | RB |

REVISIONS:

| REV | DATE | DESCRIPTION |
|---|---|---|
| 3 | 06/07/24 | PLAN CHECK |
| 2 | 03/26/24 | PLAN CHECK |
| 1 | 12/20/23 | PLAN CHECK |
| 0 | 03/27/23 | 100% CONSTRUCTION DRAWING |
| B | 03/09/23 | JURISDICTION COMMENTS |
| A | 01/12/23 | 90% CONSTRUCTION DRAWING |

LICENSEE:

REGISTERED PROFESSIONAL ENGINEER CHRIS E. LEE 78549 CIVIL STATE OF CALIFORNIA

06/07/24

PROJECT INFORMATION:

CLL05599

1880 LOMA VISTA DR.,
GLENDALE, CA 91208

SHEET TITLE:

NEW ANTENNA PLAN / ANTENNA AND RRU SCHEDULE

SHEET NUMBER:

A-4

**SCALE NOTE:**
IF DIMENSIONS SHOWN ON PLAN DO NOT SCALE CORRECTLY, CHECK FOR REDUCTION OR ENLARGEMENT FROM ORIGINAL PLANS.

NOTE:
ALL EQUIPMENT TO BE 1'-0" ABOVE GRADE.

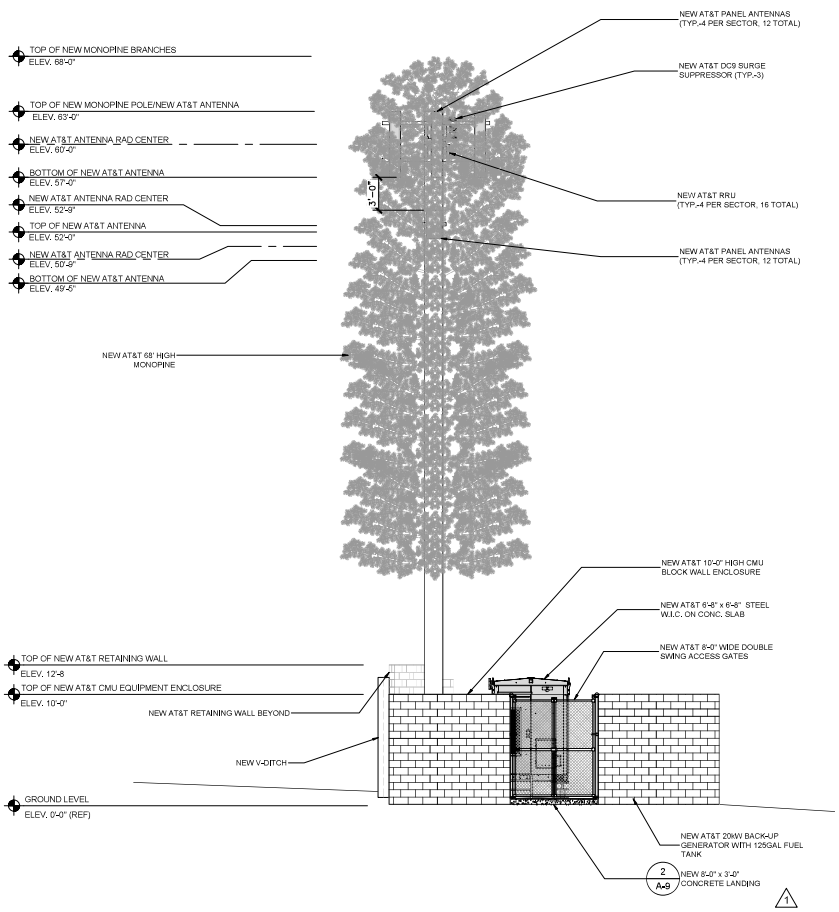


NEW SOUTHWEST ELEVATION — SCALE 3/16"=1'-0" — 2

**SCALE NOTE:**
IF DIMENSIONS SHOWN ON PLAN DO NOT SCALE CORRECTLY, CHECK FOR REDUCTION OR ENLARGEMENT FROM ORIGINAL PLANS.

NOTE:
ALL EQUIPMENT TO BE 1'-0" ABOVE GRADE.

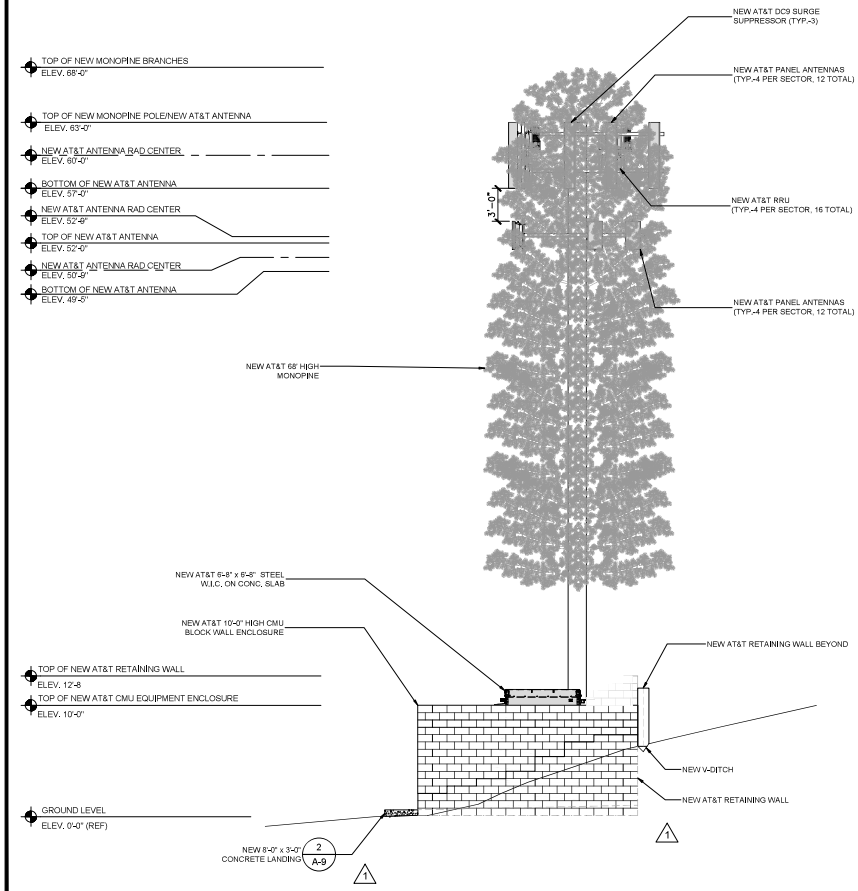


NEW NORTHWEST ELEVATION — SCALE 3/16"=1'-0" — 1

APPLICANT:

The new at&t

1452 EDINGER AVENUE,
3RD FLOOR
TUSTIN, CA 92780

ENGINEER:

Eukon
an SFC Communications, Inc. Company
65 POST, SUITE 1000
IRVINE, CA 92618
TEL: (949) 553-8566
www.eukongroup.com

THIS PAGE CONTAINS CONFIDENTIAL, PROPRIETARY OR TRADE SECRET INFORMATION EXEMPT FROM DISCLOSURE UNDER APPLICABLE LAW.

| | |
|---|---|
| DRAWN BY: | MG |
| CHECKED BY: | RB |

REVISIONS:

| REV | DATE | DESCRIPTION |
|---|---|---|
| | | |
| | | |
| | | |
| | | |
| | | |
| 3 | 06/07/24 | PLAN CHECK |
| 2 | 03/26/24 | PLAN CHECK |
| 1 | 12/20/23 | PLAN CHECK |
| 0 | 03/27/23 | 100% CONSTRUCTION DRAWING |
| B | 03/09/23 | JURISDICTION COMMENTS |
| A | 01/12/23 | 90% CONSTRUCTION DRAWING |

LICENSEE:

REGISTERED PROFESSIONAL ENGINEER
CHRIS B. LEE
78549
CIVIL
STATE OF CALIFORNIA

06/07/24

PROJECT INFORMATION:

CLL05599

1880 LOMA VISTA DR.,
GLENDALE, CA 91208

SHEET TITLE:

NEW SOUTHWEST AND NORTHWEST ELEVATIONS

SHEET NUMBER:

A-5

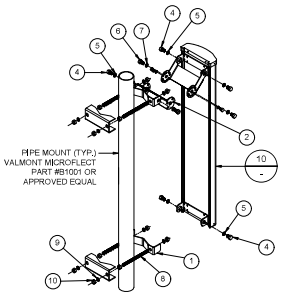


NOTES:

1. INSERT SCISSOR BRACKETS BETWEEN THE UPPER ANTENNA MOUNTING BRACKET AND THE UPPER POLE ADAPTER BRACKET. SECURE USING 1/2 INCH HARDWARE PROVIDED.
2. TO SET THE DEGREE OF DOWNTILT, ALIGN THE DESIRED HOLES ON THE SCISSOR BRACKETS AND SECURE USING 5/16 INCH HARDWARE PROVIDED.
3. THE NUMBER OF CONNECTORS WILL VARY BASED ON ANTENNA TYPE.

| ITEM | QTY | DESCRIPTION |
|---|---|---|
| 1 | 1 | ADAPTER, POLE, LOWER |
| 2 | 1 | BRACKET, DOWNTILT, POLE |
| 3 | 1 | BRACKET, DOWNTILT, ANTENNA |
| 4 | 6 | 1/2 x 1 HEX HEAD BOLT |
| 5 | 6 | 1/2 SPLIT WASHER |
| 6 | 2 | 5/16 x 1 HEX HEAD BOLT |
| 7 | 2 | 5/16 SPLIT WASHER |
| 8 | 4 | 1/2" THREADED ROD |
| 9 | 8 | 1/2" SPLIT WASHER |
| 10 | 12 | 1/2" NUT |

## ANTENNA MOUNTING

SCALE NONE | 12

## COMMSCOPE - NNH4-45B-R6

DIMENSIONS (LxWxD): 72.8 x 18 x 7 in
NET WEIGHT: 80.3 lbs

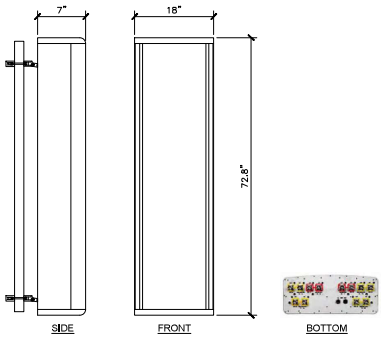


## ANTENNA

SCALE NONE | 10

## NOT USED

SCALE NONE | 7

## ERICSSON - AIR6449 N77D

DIMENSIONS (LxWxD): 31 x 15.9 x 10.6 in
NET WEIGHT (WITHOUT MOUNTING): 83.8 lbs

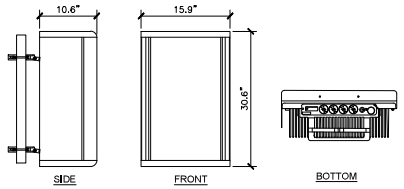


## ANTENNA SPECS

SCALE NONE | 4

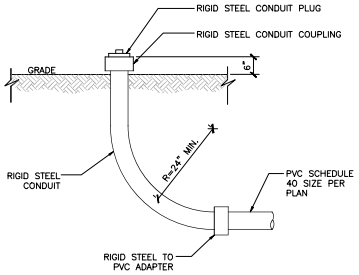


## STUB-UP DETAIL

SCALE NONE | 3

## ERICSSON - AIR6449 N77 MOUNTING

| | |
|---|---|
| TYPE NO. | 85010070 |
| NAME | AIR CLAMP KIT 55–115 mm |
| STATUS | BESTELLT |
| SUITABLE MAST DIAMETER | 55–115 mm |
| ANTENNA – MAST DISTANCE F | 128–132 mm |
| NUMBER OF PIECES | 2 CLAMPS |
| MATERIAL: | HOT DIPPED GALV. STL |
| CLAMP | HOT DIPPED GALV. STL. / STAINLESS STEEL |
| SCREWS | STAINLESS STEEL |
| NUTS | STAINLESS STEEL |
| WEIGHT | 4.3 KG. |

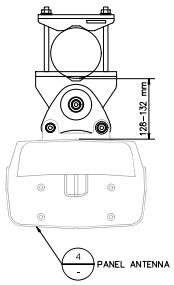


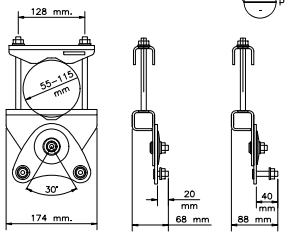


## ANTENNA MOUNTING DETAIL

SCALE NONE | 11

## ERICSSON RRUS - 4478-B14

DIMENSIONS, WxDxH: 16.5" x 13.4" x 7.7"
POWER CONSUMPTION: 805W
WEIGHT: 59.9 LBS.
STANDARDS: UL62368-1, UL50E, UL60950-22

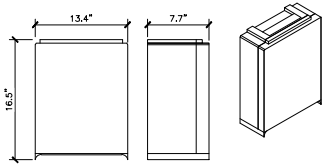


## RADIO SPECS

SCALE NONE | 9

## ERICSSON - RADIO 8843 B2/B66A

MECHANICAL SPECIFICATIONS

| | |
|---|---|
| CAPACITY: | 4 ANTENNA PORTS 4TX/4RX |
| DIMENSIONS (WxDxH): | 18" x 13.2" x 11.3" |
| WEIGHT: | 75 LBS. |
| MOUNTING: | WALL AND POLE MOUNT |
| ALARM: | 2 EXTERNAL ALARMS |

ELECTRICAL SPECIFICATIONS:

| | |
|---|---|
| POWER SUPPLY: | -48 VDC OR 100-250 VAC |
| POWER OUTPUT: | 320 WATTS |
| MAX HEAT DISSIPATION: | 1.2 kW |
| MINIMUM AC FUSE RATING: | 12 AMP |
| STANDARDS: | UL62368-1, UL50E, UL60950-22 |

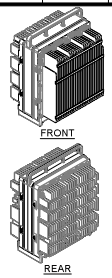


## RADIO SPECS

SCALE NONE | 6

## ERICSSON RRU-2012 B29

DIMENSIONS, WxDxH: 13.5" x 4.9" x 16.5"
POWER CONSUMPTION: 2 x 40W, 10 min
WEIGHT: 43.1 LBS. EXCL. MOUNTING HARDWARE

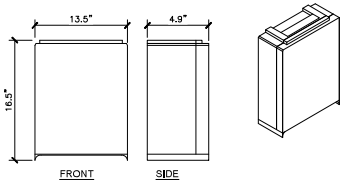


## RADIO SPECS

SCALE NONE | 2

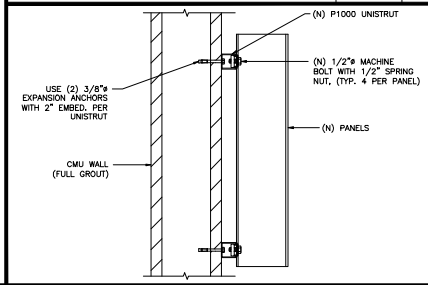


## PANEL TO CMU WALL

SCALE NONE | 8

## ERICSSON - RADIO 4449

MECHANICAL SPECIFICATIONS

| | |
|---|---|
| CAPACITY: | 4 ANTENNA PORTS 4TX/4RX |
| DIMENSIONS (WxDxH): | 15" x 13.2" x 9.3" |
| WEIGHT: | 70 LBS. |
| MOUNTING: | WALL AND POLE MOUNT |
| ALARM: | 2 EXTERNAL ALARMS |

ELECTRICAL SPECIFICATIONS:

| | |
|---|---|
| POWER SUPPLY: | -48 VDC OR 100-250 VAC |
| POWER OUTPUT: | 320 WATTS |
| MAX HEAT DISSIPATION: | 1.2 kW |
| MINIMUM AC FUSE RATING: | 12 AMP |
| STANDARDS: | UL62368-1, UL50E, UL60950-22 |

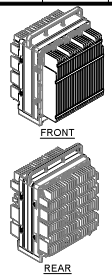


## RADIO SPECS

SCALE NONE | 5

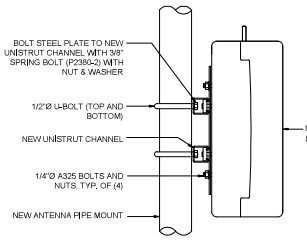


## RADIO MOUNTING

SCALE NONE | 1

APPLICANT:

The new at&t

1452 EDINGER AVENUE,
3RD FLOOR
TUSTIN, CA 92780

ENGINEER:

Eukon
an SFC Communications, Inc. Company
65 POST, SUITE 1000
IRVINE, CA 92618
TEL: (949) 553-8566
www.eukongroup.com



| | |
|---|---|
| DRAWN BY: | MG |
| CHECKED BY: | RB |

REVISIONS:

| REV | DATE | DESCRIPTION |
|---|---|---|
| 3 | 06/07/24 | PLAN CHECK |
| 2 | 03/26/24 | PLAN CHECK |
| 1 | 12/20/23 | PLAN CHECK |
| 0 | 03/27/23 | 100% CONSTRUCTION DRAWING |
| B | 03/09/23 | JURISDICTION COMMENTS |
| A | 01/12/23 | 90% CONSTRUCTION DRAWING |

LICENSEE:

REGISTERED PROFESSIONAL ENGINEER CHRIS A. LEE 78549 CIVIL STATE OF CALIFORNIA

06/07/24

PROJECT INFORMATION:

CLL05599

1880 LOMA VISTA DR.,
GLENDALE, CA 91208

SHEET TITLE:

EQUIPMENT DETAILS

SHEET NUMBER:

A-6

## NOT USED

SCALE NONE | 7

## BASEBAND UNIT SPECS

SCALE NONE | 5

ERICSSON BASEBAND - 6651

DIMENSIONS (HxWxD): 1.73 x 19 x 15.1 in
WEIGHT: 17 lbs

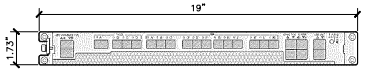


## BASEBAND UNIT SPECS

SCALE NONE | 6

ERICSSON BASEBAND R503 XMU - BASEBAND AUXILARY MULTIPLEXING UNIT

MECHANICAL SPECIFICATIONS:

DIMENSIONS: 1.22"H x 11"D x 13.8"W

WEIGHT: 5 LBS

HEAT DISSIPATION: 50 WATTS

TECHNICAL SPECIFICATIONS:

PLATFORM FOR CPRI MULTIPLEXING AND DE-MULTIPLEXING
- -16x SFP+ PORTS
  - PLUGGABLE OPTICAL TRANSCEIVERS
  - DIRECT ATTACH CABLES
- -48V DC POWERING
- -FANLESS

TARGET RELEASE - L14B
- -2x (10Gbps -> 4x 2.5 Gbps)

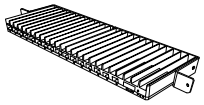

## NOT USED

SCALE NONE | 4

## POWER RACK

SCALE NONE | 2

TECHNICAL SPECIFICATIONS:

NOMINAL SYSTEM VOLTAGE: −48 VDC
CONTROL: (ACU+)
SYSTEM: 4000 AMPS AT −48VDC 500 AMPS AT +24VDC
BAY: 1500 AMPS AT −48 VDC 500 AMPS AT +24VDC
SHELF: 250 AMPS AT −48 VDC 187.5 AMPS AT +24 VDC
RECTIFIER: 200 WATTS
CONVERTER: 1500 WATTS
DISTRIBUTION PANEL: 600 AMPS AT −48 VDC 500 AMPS AT +24 VDC

ENVIRONMENTAL SPECIFICATIONS:

OPERATING TEMPERTURE: −40°F−104°F (−40°C−40°C) [CONTINUOUS
OPERATION]
STORAGE: −40°F−104°F (−40°C−85°C) [CONTINUOUS OPERATION]
HUMIDITY: 0%−95% RELATIVE
VENTILATION: RECTIFIERS/CONVERTERS ARE FAN COOLED

NOTES:
POWER PLAN NetSure 721 POWER SYSTEM BY EMERSON OR EQUAL APPROVED AT&T.

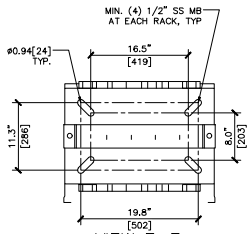


VIEW E−E

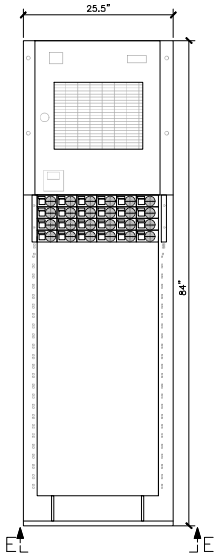


## BASEBAND UNIT SPECS

SCALE NONE | 6

## NOT USED

SCALE NONE | 4

## SURGE SUPPRESSOR

SCALE NONE | 3

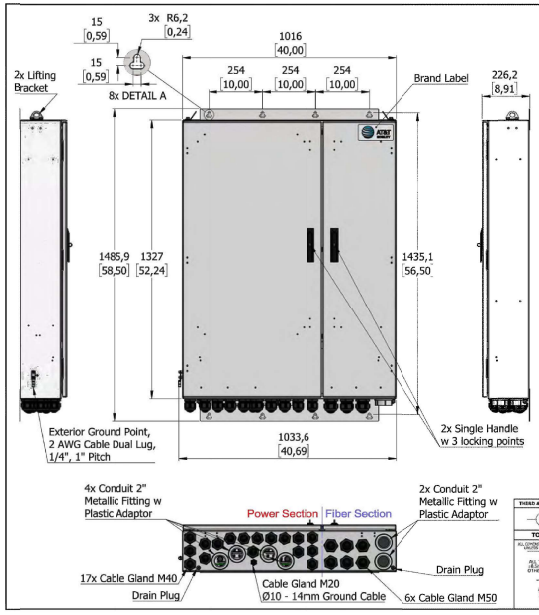


| REV. | DATE | CHANGE DESCRIPTION | APPROVED |
|---|---|---|---|
| 14 | 20JUL22 | Updated Drawing | K. Bakatsias |
| 13 | 12MAY22 | Enclosure Material Changed to Aluminum | K. Bakatsias |
| 12 | 11APR22 | LEDs added on PCBs | K. Bakatsias |
| 11 | 08APR22 | Model Updated | K. Bakatsias |
| 10 | 15MAR22 | Model Updated | K. Bakatsias |
| 09 | 27JAN22 | Model Updated | K. Bakatsias |
| 08 | 21DEC21 | Main GND Lug Updated, Enclosure Mounting Updated | K. Bakatsias |
| 07 | 20DEC21 | Updated Wire Lug Information | K. Bakatsias |
| 06 | 15DEC21 | Design Updated | K. Bakatsias |
| 05 | 13DEC21 | New design with Pluggable SPDs, Enclosure updated | K. Bakatsias |
| 04 | 10DEC21 | Wet Chamber added, Fiber Section updated, Enclosure updated | K. Bakatsias |
| 03 | 06DEC21 | Ground Bar updated, Minor changes | K. Bakatsias |
| 02 | 04DEC21 | Breakers arrangement updated, Cable Glands updated | K. Bakatsias |
| 01 | 03DEC21 | Release for Review | K. Bakatsias |

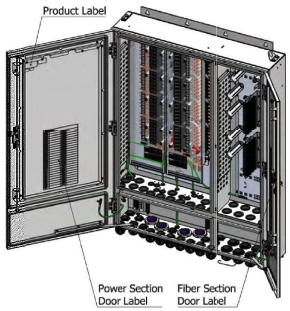


THIRD ANGLE PROJECTION

TOLERANCES
ALL DIMENSIONS ARE IN INCHES UNLESS OTHERWISE SPECIFIED
ALL TOLERANCES ARE ±0.5mm EXCEPT UNLESS OTHERWISE SPECIFIED
ALL BENDING TOLERANCES TO BE ± 1.0°

Raycap

DESCRIPTION
DC50-48-60-96-50F CRD

| | DATE | NAME |
|---|---|---|
| DRAWN BY: | 03DEC21 | E. Gkithonas |
| CHECKED BY: | 03DEC21 | K. Bakatsias |
| ENG: | | |
| MFG. ENG): | | |

DWG. NO. 6000056702 REV. 14
ALT. NO.
SCALE: NOT TO SCALE SHEET 1 OF 8



## DATA RACK

SCALE NONE | 1

NOTES: (UNLESS OTHERWISE SPECIFIED)

1. DIMENSIONS ARE IN INCHES
2. DIMENSIONS ARE FOR REFERENCE ONLY.
3. EQUIPPED WITH WRIST GROUND STRAP CONNECTION POINTS.
4. THIS RACK INCLUDES THE FOLLOWING:
   - JUNCTION HARDWARE KIT
   - SHIM KIT
   - STATIC KIT
   - V−BOLT KIT (INCLUDED ONLY WITH RACKS WITH TOP ANGLE)
   - 5" GUARD RAIL CVR W/ AC CUTOUT
5. RACKS GREATER THAN 8'−0" DO NOT BENEFIT FROM HAVING HEAVY GUAGE UPRIGHTS AND GUSSETS, AS THEY ARE ALSO SUPPORTED AT THE TOP DURING INSTALLLATION. RACKS 7'−0" TO 8'−0" ARE FLOOR SUPPORTED ONLY.

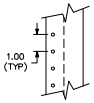


DETAIL 1
(WECO WIDE SPACING)

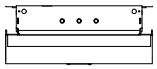

VIEW A−A
(TOP VIEW)

| PART NO | DIMENSIONS A | DIMENSIONS B |
|---|---|---|
| KW204F* | 108.00 | 49 |
| KW205F* | 138.00 | 64 |
| KW221F* | 84.00 | 37 |

* TELECT STANDARD

WEIGHT CAPACITY: 450lbs

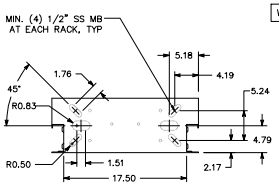


VIEW B−B
(BOTTOM VIEW)

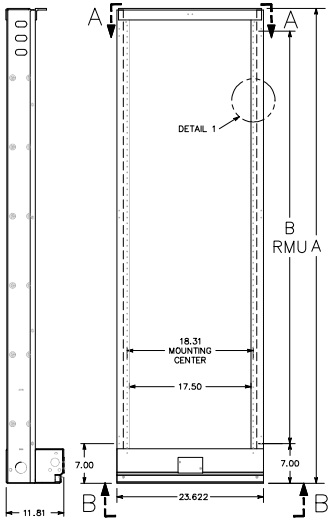


APPLICANT:

The new at&t
1452 EDINGER AVENUE,
3RD FLOOR
TUSTIN, CA 92780

ENGINEER:

Eukon
an SFC Communications, Inc. Company
65 POST, SUITE 1000
IRVINE, CA 92618
TEL: (949) 553-8566
www.eukongroup.com



| | |
|---|---|
| DRAWN BY: | MG |
| CHECKED BY: | RB |

REVISIONS:

| REV | DATE | DESCRIPTION |
|---|---|---|
| 3 | 06/07/24 | PLAN CHECK |
| 2 | 03/26/24 | PLAN CHECK |
| 1 | 12/20/23 | PLAN CHECK |
| 0 | 03/27/23 | 100% CONSTRUCTION DRAWING |
| B | 03/09/23 | JURISDICTION COMMENTS |
| A | 01/12/23 | 90% CONSTRUCTION DRAWING |

LICENSEE:

06/07/24

PROJECT INFORMATION:

CLL05599

1880 LOMA VISTA DR.,
GLENDALE, CA 91208

SHEET TITLE:

EQUIPMENT DETAILS

SHEET NUMBER:

A−7

| NVENT HOFFMAN ATC48R369 TELCO BOX | |
|---|---|
| ENCLOSURE DIMS (HxWxD) | 48"x36"x9" |
| ENCLOSURE WEIGHT | 140 lbs |
| MOUNTING | WALL/H-FRAME |
| PROTECTION RATING | NEMA TYPE 3R; IP32 |

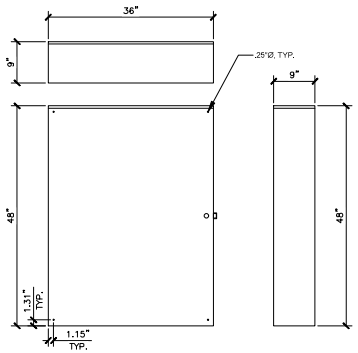


## TELCO BOX DETAIL

SCALE NONE | 10

## NOT USED

SCALE NONE | 8

## NOT USED

SCALE NONE | 6

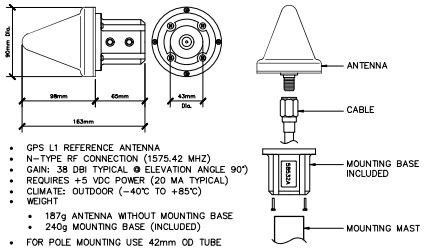


- GPS L1 REFERENCE ANTENNA
- N-TYPE RF CONNECTION (1575.42 MHZ)
- GAIN: 38 DBI TYPICAL @ ELEVATION ANGLE 90°)
- REQUIRES +5 VDC POWER (20 MA TYPICAL)
- CLIMATE: OUTDOOR (-40°C TO +85°C)
- WEIGHT
  - 187g ANTENNA WITHOUT MOUNTING BASE
  - 240g MOUNTING BASE (INCLUDED)
- FOR POLE MOUNTING USE 42mm OD TUBE

## GPS ANTENNA SPEC

SCALE NONE | 3

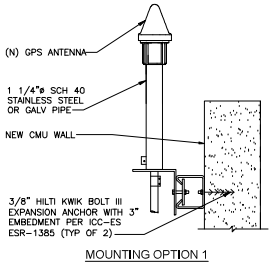


MOUNTING OPTION 1

NOTES:

1. LOCATION OF ANTENNA MUST HAVE CLEAR VIEW OF SOUTHERN SKY AND CANNOT HAVE ANY BLOCKAGES EXCEEDING 25% OF THE SURFACE AREA OF A HEMISPHERE AROUND THE GPS ANTENNA.
2. ALL GPS ANTENNA LOCATIONS MUST BE ABLE TO RECEIVE CLEAR SIGNALS FROM A MINIMUM OF FOUR (4) SATELLITES. VERIFY WITH HANDHELD GPS BEFORE FINAL LOCATION OF GPS ANTENNA.
3. THE ANTENNA SHOULD NOT BE LOCATED WITHIN 3FT. OF ANY METALLIC WALLS OR OBJECTS IN ANY RADIAL DIRECTION OF THE DUAL BAND OMNI SECTION.

## GPS ANTENNA MOUNTING

SCALE NONE | 2

RAYCAP DC9-48-60-24-8C-EV

| | |
|---|---|
| DIMENSIONS (LxWxD): | 198x260 mm (7.79"x10.24") |
| NOMINAL OPERATING VOLTAGE: | 48 VDC |
| NOMINAL DISCHARGE CURRENT: | 20 kA 8/20 s |
| MAXIMUM DISCHARGE CURRENT: | 60 kA 8/20 s |
| MAXIMUM CONTINUOUS OPERATING VOLTAGE: | 75 VAC |
| VOLTAGE PROTECTION RATING: | 330V |
| WIND LOADING | 150 MPH (SUSTAINED) 195 MPH (GUST) |
| TOTAL WEIGHT: | 26.2 LBS. |

NOTES:

RAYCAP VIA AT&T SUPPLIES THE DC6 OVER VOLTAGE PROTECTOR AND PIPE MOUNTING BRACKETS, SUBCONTRACTOR SHALL SUPPLY THE PIPE.

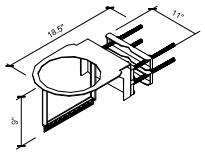


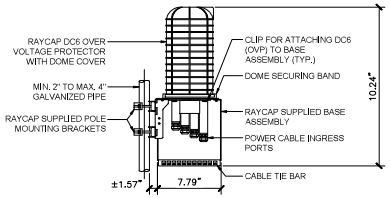


## SURGE SUPPRESSOR SPEC

SCALE NONE | 9

## NOT USED

SCALE NONE | 7

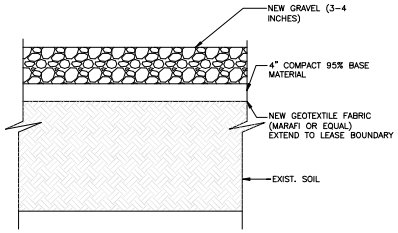


## GRAVEL BED

SCALE NONE | 5

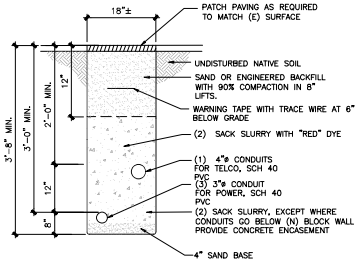


## UTILITY TRENCH

SCALE NONE | 4

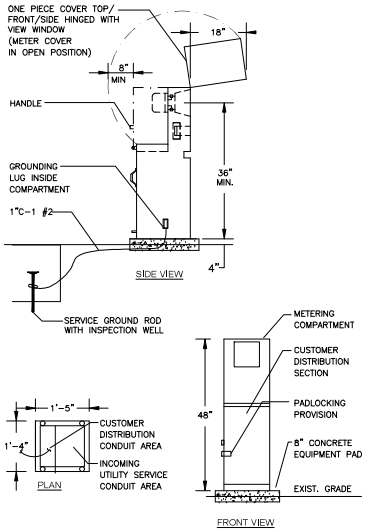


## METER PEDESTAL SPEC

SCALE NONE | 1

APPLICANT:

The new at&t

1452 EDINGER AVENUE,
3RD FLOOR
TUSTIN, CA 92780

ENGINEER:

Eukon
an SFC Communications, Inc. Company
65 POST, SUITE 1000
IRVINE, CA 92618
TEL: (949) 553-8566
www.eukongroup.com



| | |
|---|---|
| DRAWN BY: | MG |
| CHECKED BY: | RB |

REVISIONS:

| REV | DATE | DESCRIPTION |
|---|---|---|
| 3 | 06/07/24 | PLAN CHECK |
| 2 | 03/26/24 | PLAN CHECK |
| 1 | 12/20/23 | PLAN CHECK |
| 0 | 03/27/23 | 100% CONSTRUCTION DRAWING |
| B | 03/09/23 | JURISDICTION COMMENTS |
| A | 01/12/23 | 90% CONSTRUCTION DRAWING |

LICENSEE:

REGISTERED PROFESSIONAL ENGINEER CHRIS B. LEE 78549 CIVIL STATE OF CALIFORNIA

06/07/24

PROJECT INFORMATION:

CLL05599

1880 LOMA VISTA DR.,
GLENDALE, CA 91208

SHEET TITLE:

EQUIPMENT DETAILS

SHEET NUMBER:

A-8

## NOT USED

6

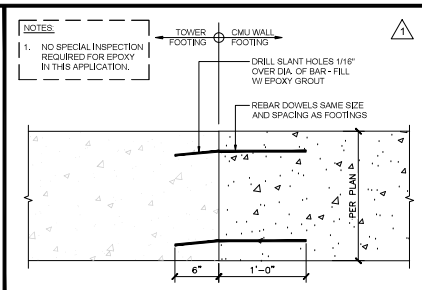


## FOUNDATION DOWELL DETAIL

SCALE NONE | 5

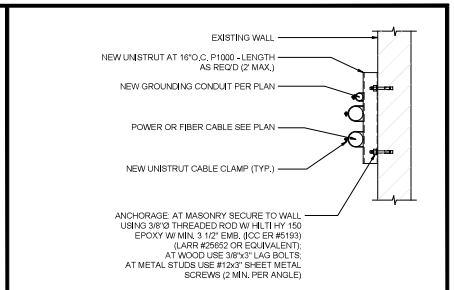


## CONDUIT TO WALL

SCALE NONE | 3

CONCRETE MASONRY BLOCK

1. MASONRY UNITS FOR HOLLOW UNIT MASONRY SHALL COMPLY WITH SECTION 2103 OF THE CBC. CONSTRUCTION SHALL COMPLY WITH CHAPTER 21 OF THE CBC AND LOCAL CODES. MASONRY SHALL BE LAID IN STRAIGHT UNIFORM COURSES IN RUNNING BOND. JOINTS SHALL BE TOOLED CONCAVE AND BE UNIFORM IN SIZE. TIE INTERSECTING WALLS BY OVERLAPPING UNITS IN ALTERNATE COURSES. ROUGHEN AND CLEAN CONCRETE BEARING SURFACES FOR THE PLACEMENT OF THE FIRST COURSE. VERTICAL HEAD JOINTS SHALL BE FILLED SOLID AND SHOVED TIGHTLY TO PROVIDE BOND TO BOTH BLOCKS.
2. MORTAR SHALL BE FRESHLY PREPARED AND UNIFORMLY MIXED OF 1 PART PORTLAND CEMENT, 1/2 MAXIMUM TO 1/4 MINIMUM PARTS LIME PUTTY OR HYDRATED LIME, AND 3 PARTS SAND.
3. GROUT SHALL BE FLUID CONSISTENCY AND MIXED IN RATIO OF 1 PART CEMENT AND 3 PARTS SAND FOR GROUT SPACES LESS THAN 4" IN ANY DIRECTION. FOR SPACES GREATER THAN 4" THE RATIO IS TO BE 1 PART CEMENT, 2 PARTS SAND AND 2 PARTS PEA GRAVEL. AGGREGATE AND SAND SHALL CONFORM TO ASTM C-144. SOLID GROUT ALL CELLS.
4. USE CARE TO PREVENT MORTAR AND GROUT SPILLAGE ON THE FACE OF THE MASONRY. CLEAN SUCH SPILLAGE IMMEDIATELY. REPAIR ANY DAMAGES OR INTERSTICES BETWEEN BLOCK AND REMOVE STAINS AT THE COMPLETION OF WORK.
5. SPLICE ALL BARS IN MASONRY WITH A MINIMUM OF 48 BAR DIAMETER LAPS (2'-0" MINIMUM).
6. ALL ISOLATED BOLTS EMBEDDED IN MASONRY SHALL BE GROUTED SOLIDLY IN PLACE WITH NOT LESS THAN 2" OF GROUT SURROUNDING THE BOLT.
7. SEAL RETAINING FACE OF WALL AND FOOTING WITH 2 COATS OF HENRY'S 502 ASPHALTIC MASTIC.

CONSTRUCTION MATERIALS SPECIFICATIONS.

1. ALL CONCRETE AND GROUT SHALL BE MIN. f'c = 2500 PSI.
2. CMU BLOCK SHALL BE MIN. f'm = 1500 PSI. 8"x8"x16" U.N.O.
3. ALL STEEL SHALL BE GRADE 60. fy = 60,000 PSI. Fs = 24,000 PSI

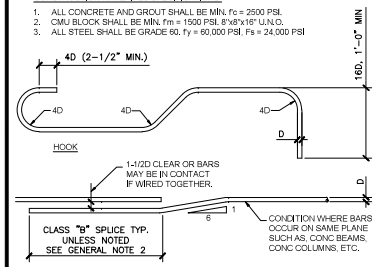


REINF. BENDING DETAIL

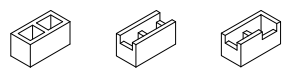


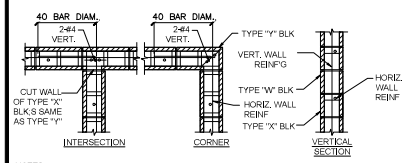


NOTES

1. GROUT ALL CELLS.
2. VERTICAL REINFORCING TO BE AT CENTER OF WALL UNLESS NOTED OTHERWISE.
3. ALSO SEE GENERAL MASONRY NOTES.

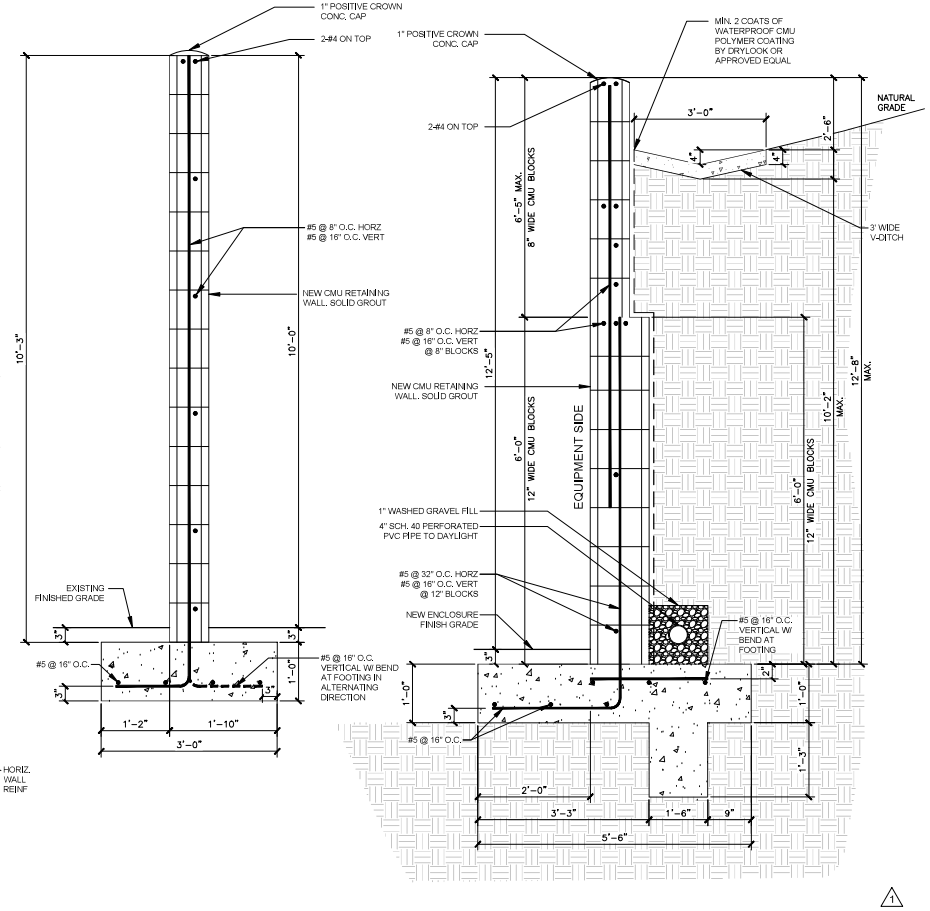


## RETAINING WALL AND SWALE DETAIL

SCALE NONE | 4

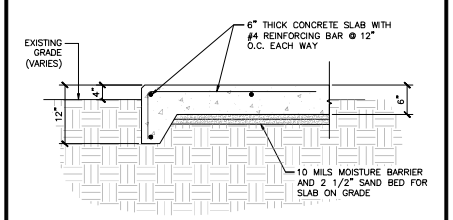


## CONCRETE LANDING

SCALE NONE | 2

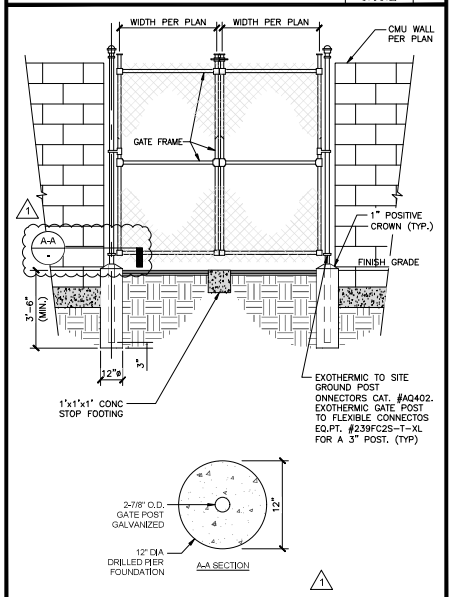


## CHAIN LINK ACCESS GATE

SCALE NONE | 1

APPLICANT:

The new at&t

1452 EDINGER AVENUE,
3RD FLOOR
TUSTIN, CA 92780

ENGINEER:

Eukon
an SFC Communications, Inc. Company
65 POST, SUITE 1000
IRVINE, CA 92618
TEL: (949) 553-8566
www.eukongroup.com

THIS PAGE CONTAINS CONFIDENTIAL, PROPRIETARY OR TRADE SECRET INFORMATION EXEMPT FROM DISCLOSURE UNDER APPLICABLE LAW.

| | |
|---|---|
| DRAWN BY: | MG |
| CHECKED BY: | RB |

REVISIONS:

| REV | DATE | DESCRIPTION |
|---|---|---|
| 3 | 06/07/24 | PLAN CHECK |
| 2 | 03/26/24 | PLAN CHECK |
| 1 | 12/20/23 | PLAN CHECK |
| 0 | 03/27/23 | 100% CONSTRUCTION DRAWING |
| B | 03/09/23 | JURISDICTION COMMENTS |
| A | 01/12/23 | 90% CONSTRUCTION DRAWING |

LICENSEE:

REGISTERED PROFESSIONAL ENGINEER CHRIS A. LEE 78549 CIVIL STATE OF CALIFORNIA

06/07/24

PROJECT INFORMATION:

CLL05599

1880 LOMA VISTA DR.,
GLENDALE, CA 91208

SHEET TITLE:

EQUIPMENT DETAILS

SHEET NUMBER:

A-9

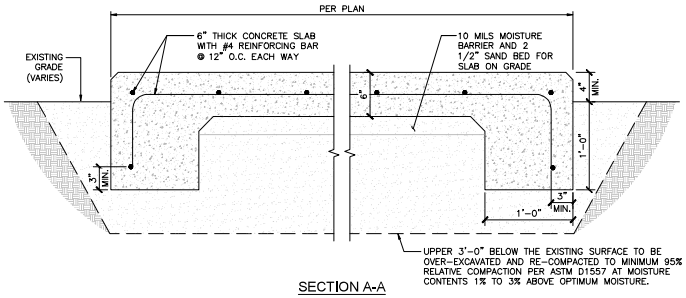


SECTION A-A

CONCRETE AND REINFORCING STEEL NOTES:

1. ALL CONCRETE WORK SHALL BE IN ACCORDANCE WITH THE ACI 301, ACI 318, ACI 336, ASTM A184, ASTM A185 AND THE DESIGN AND CONSTRUCTION SPECIFICATION PER CAST-IN-PLACE CONCRETE.
2. ALL CONCRETE SHALL HAVE A MINIMUM COMPRESSIVE STRENGTH OF 2500 PSI AT 28 DAYS, UNLESS NOTED OTHERWISE.
3. REINFORCING STEEL SHALL CONFORM TO ASTM A615, GRADE 60, DEFORMED UNLESS NOTED OTHERWISE. WELDED WIRE FABRIC SHALL CONFORM TO ASTM A185 WELDED STEEL WIRE FABRIC UNLESS NOTED OTHERWISE. SPLICES SHALL BE CLASS "B" AND ALL HOOKS SHALL BE STANDARD, UNO.
4. THE FOLLOWING MINIMUM CONCRETE COVER SHALL BE PROVIDED FOR REINFORCING STEEL UNLESS SHOWN OTHERWISE ON DRAWINGS:
   CONCRETE CAST AGAINST EARTH.....3 IN.
   CONCRETE EXPOSED TO EARTH OR WEATHER:
   #6 AND LARGER .....2 IN.
   #5 AND SMALLER & WWF .....1 1/2 IN.
   CONCRETE NOT EXPOSED TO EARTH OR WEATHER OR NOT CAST AGAINST THE GROUND:
   SLAB AND WALL .....3/4 IN.
   BEAMS AND COLUMNS .....1 1/2 IN.
5. A CHAMFER 3/4" SHALL BE PROVIDED AT ALL EXPOSED EDGES OF CONCRETE, UNO, IN ACCORDANCE WITH ACI 301 SECTION 4.2.4.
6. GRAVEL SHALL BE NATURAL OR CRUSHED STONE WITH 100% PASSING 1 INCH SIEVE.
7. SLAB TOLERANCE IS ±1/4".
8. 2.SLOPE GRADE AWAY FROM FOUNDATION.

CONCRETE PAD | 4

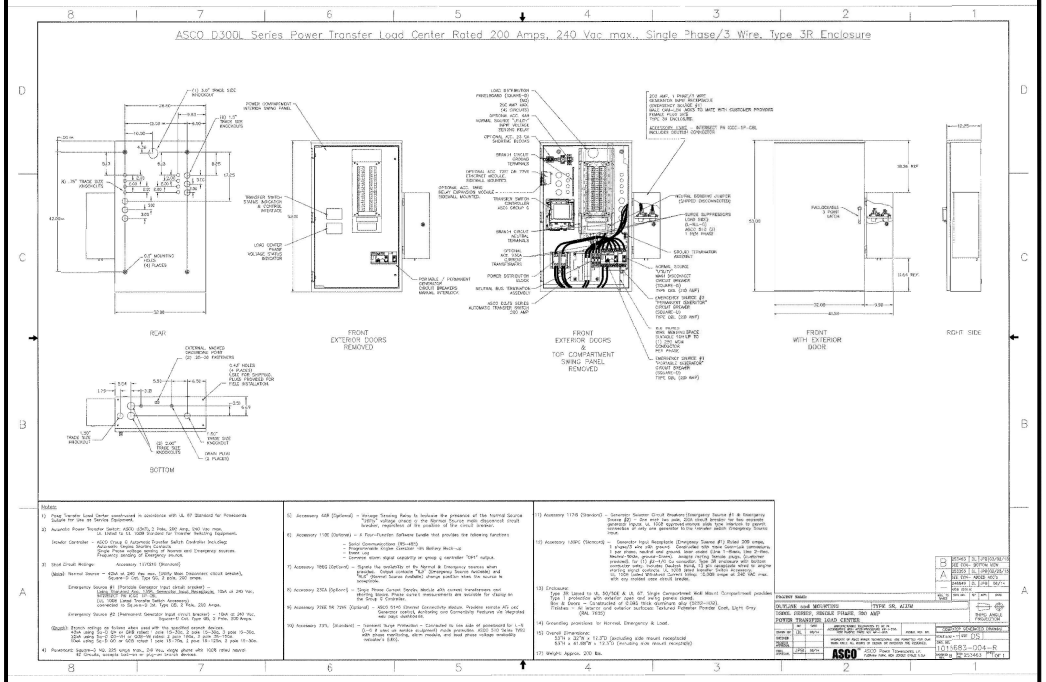


PPC/ATS w/ CAMLOCK | 2

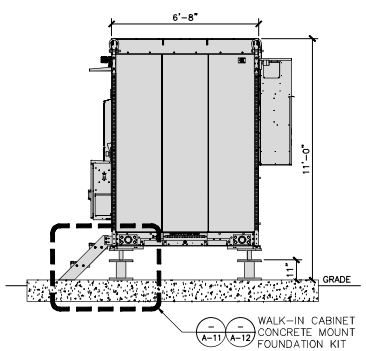


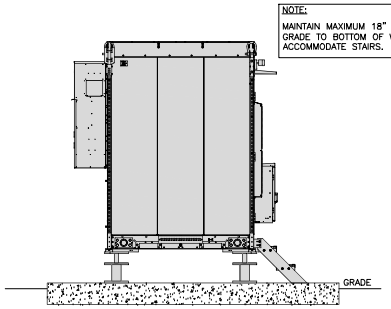


NOTE:
MAINTAIN MAXIMUM 18" FROM GRADE TO BOTTOM OF WIC TO ACCOMMODATE STAIRS.

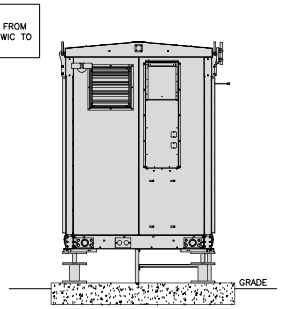


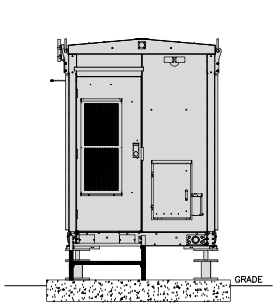


WALK-IN CABINET ELEVATIONS | 3

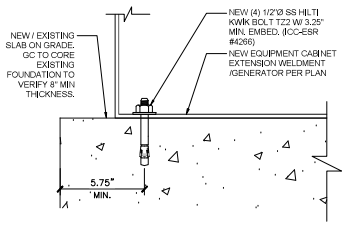


CONCRETE ANCHORAGE | 1

APPLICANT:

The new at&t

1452 EDINGER AVENUE,
3RD FLOOR
TUSTIN, CA 92780

ENGINEER:

Eukon
an SFC Communications, Inc. Company
65 POST, SUITE 1000
IRVINE, CA 92618
TEL: (949) 553-8566
www.eukongroup.com



| | |
|---|---|
| DRAWN BY: | MG |
| CHECKED BY: | RB |

REVISIONS:

| REV | DATE | DESCRIPTION |
|---|---|---|
| | | |
| | | |
| | | |
| | | |
| | | |
| 3 | 06/07/24 | PLAN CHECK |
| 2 | 03/26/24 | PLAN CHECK |
| 1 | 12/20/23 | PLAN CHECK |
| 0 | 03/27/23 | 100% CONSTRUCTION DRAWING |
| B | 03/09/23 | JURISDICTION COMMENTS |
| A | 01/12/23 | 90% CONSTRUCTION DRAWING |

LICENSEE:

REGISTERED PROFESSIONAL ENGINEER CHRIS A. LEE 78549 CIVIL STATE OF CALIFORNIA

06/07/24

PROJECT INFORMATION:

CLL05599

1880 LOMA VISTA DR.,
GLENDALE, CA 91208

SHEET TITLE:

EQUIPMENT AND CONSTRUCTION DETAILS

SHEET NUMBER:

A-10

| REVISIONS | | | | | |
|---|---|---|---|---|---|
| REV. | DCN # | DESCRIPTION | DATE | BY | APPROVED |
| 3 | DCN00475 | ADDED CONCRETE ANCHOR CALLOUT | 06.27.18 | JCB | |

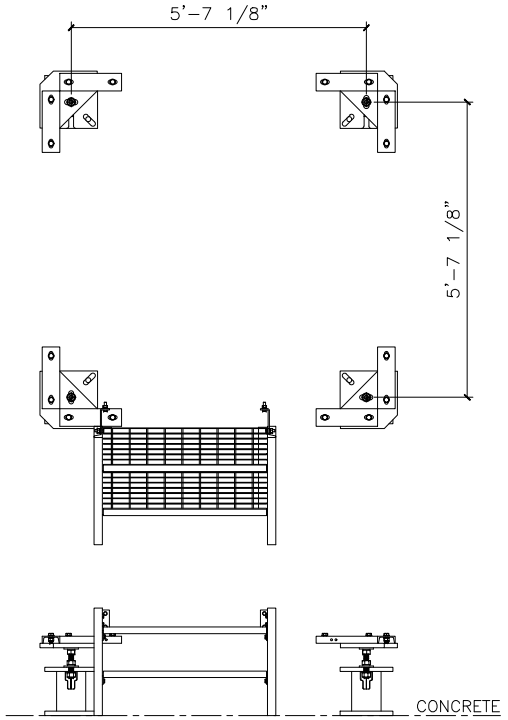


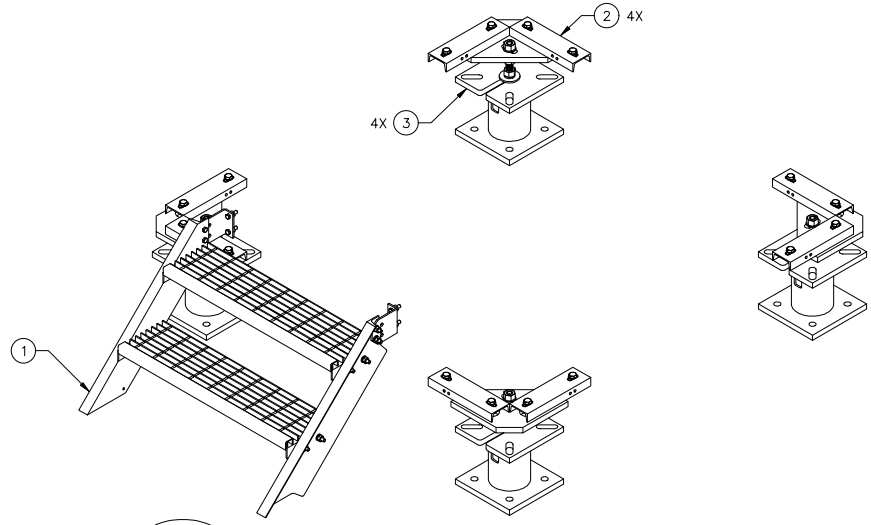


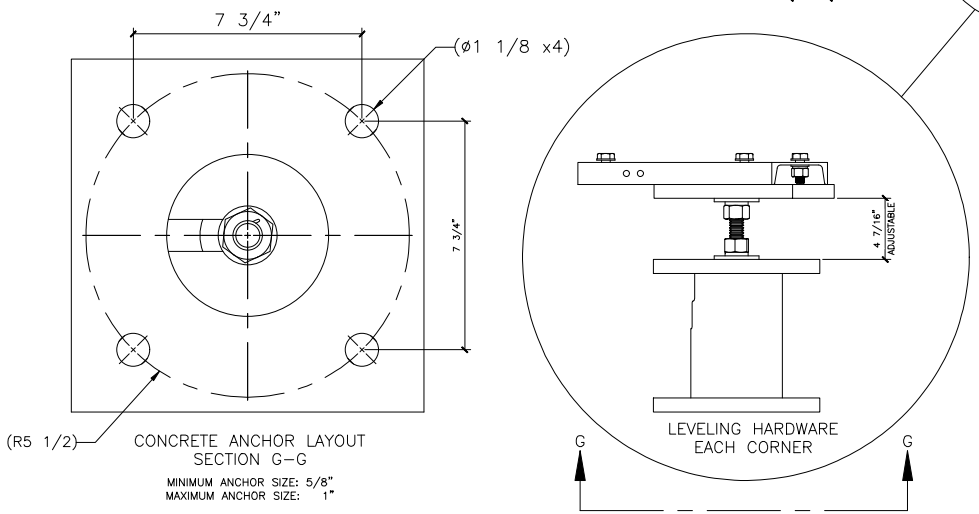


CONCRETE ANCHOR LAYOUT
SECTION G-G

MINIMUM ANCHOR SIZE: 5/8"
MAXIMUM ANCHOR SIZE: 1"

LEVELING HARDWARE
EACH CORNER

| ITEM NO. | QTY. | PART NUMBER | DESCRIPTION | WEIGHT |
|---|---|---|---|---|
| 1 | 1 | 1003-0000-0016 | WIC 2-STEP STAIRS KIT, 45 DEGREE | 102.9 |
| 2 | 4 | W-000-771 | ATT WIC HELICAL ADAPTER WELDMENT | 44.9 |
| 3 | 4 | W-000-847 | 6" X 11" EXTENSION WELDMENT | 81.5 |
| 4 | 4 | 002-0AT-H000 | ROD, THREADED, 1.00"-8 X 9.00" LG, ASTM A193 B7, GALV | 1.60 |
| 5 | 8 | 002-0NG-0000 | NUT, HX, ANCO LOCK, 1.00-8UNC, GR 2H, GALV | 0.43 |
| 6 | 8 | 002-0NG-0008 | NUT, HX, 1.00"-8UNC, GR 2H, GALV | 0.42 |
| 7 | 8 | 002-0LW-G008 | WASHER, SPLIT LOCK, 1.00", GALV | 0.09 |
| 8 | 8 | 002-0FW-G024 | WASHER, FLAT, 1.063 ID, 3.25 OD, GALV | 0.07 |
| 9 | 8 | 002-0FW-G009 | WASHER, FLAT, 1.00", F436, GALV | 0.08 |
| 10 | 16 | 002-0BG-0033 | BOLT, HX HD, .625-11UNC X 1.75" LG, ASTM A325, GALV | 0.03 |
| 11 | 16 | 002-0NG-0011 | NUT, HX, .625-11UNC, GR DH, GALV | 0.12 |
| 12 | 16 | 002-0LW-G004 | WASHER, SPLIT LOCK, .625 INCH, GALV | 0.03 |
| 13 | 32 | 002-0FW-G004 | WASHER, FLAT, .625", ASTM F436, GALV | 0.03 |

SURFACE FINISH √ UNLESS OTHERWISE SPECIFIED
MATERIAL: SEE PARTS LIST
THIRD ANGLE PROJECTION
NEXT ASSY | USED ON
APPLICATIONS

UNLESS OTHERWISE SPECIFIED DIMENSIONS ARE IN INCHES
TOLERANCES
0 ± .06
00 ± .01
000 ± .005
FRACTIONS ± 1/16
ANGLES ± .25°
HOLES:
DRILLED OR PUNCHED +1/32
BURNED ± 1/32

| APPROVALS | DATE |
|---|---|
| DRAWN C. SANCHEZ | 4.12.18 |
| CHECKED J. BUSHMAN | 5.2.18 |
| ENGINEER/DESIGNER J. BUSHMAN | 5.2.18 |
| PRODUCTION J. SUNDERLAND | 5.2.18 |

ELECTRO MECHANICAL INDUSTRIES, INC
11230 NEESHAM DRIVE
HOUSTON, TEXAS 77065
1-800-453-0050

TITLE: HELICAL MOUNT FOUNDATION KIT

SIZE D | DRAWING NO. 1000-0010-0112 | REV 3
SCALE: 1=40 | WEIGHT: 627 lbs. | SHEET 1 OF 2

CONCRETE MOUNT FOUNDATION KIT

SCALE NONE | 1

APPLICANT:

The new at&t
1452 EDINGER AVENUE,
3RD FLOOR
TUSTIN, CA 92780

ENGINEER:

Eukon
an SFC Communications, Inc. Company
65 POST, SUITE 1000
IRVINE, CA 92618
TEL: (949) 553-8566
www.eukongroup.com



DRAWN BY: MG
CHECKED BY: RB

REVISIONS:

| REV | DATE | DESCRIPTION |
|---|---|---|
| 3 | 06/07/24 | PLAN CHECK |
| 2 | 03/26/24 | PLAN CHECK |
| 1 | 12/20/23 | PLAN CHECK |
| 0 | 03/27/23 | 100% CONSTRUCTION DRAWING |
| B | 03/09/23 | JURISDICTION COMMENTS |
| A | 01/12/23 | 90% CONSTRUCTION DRAWING |

LICENSEE:

REGISTERED PROFESSIONAL ENGINEER CHRIS R. LEE 78549 CIVIL STATE OF CALIFORNIA
06/07/24

PROJECT INFORMATION:

CLL05599

1880 LOMA VISTA DR.,
GLENDALE, CA 91208

SHEET TITLE:

EQUIPMENT
CABINET DETAILS

SHEET NUMBER:

A-11

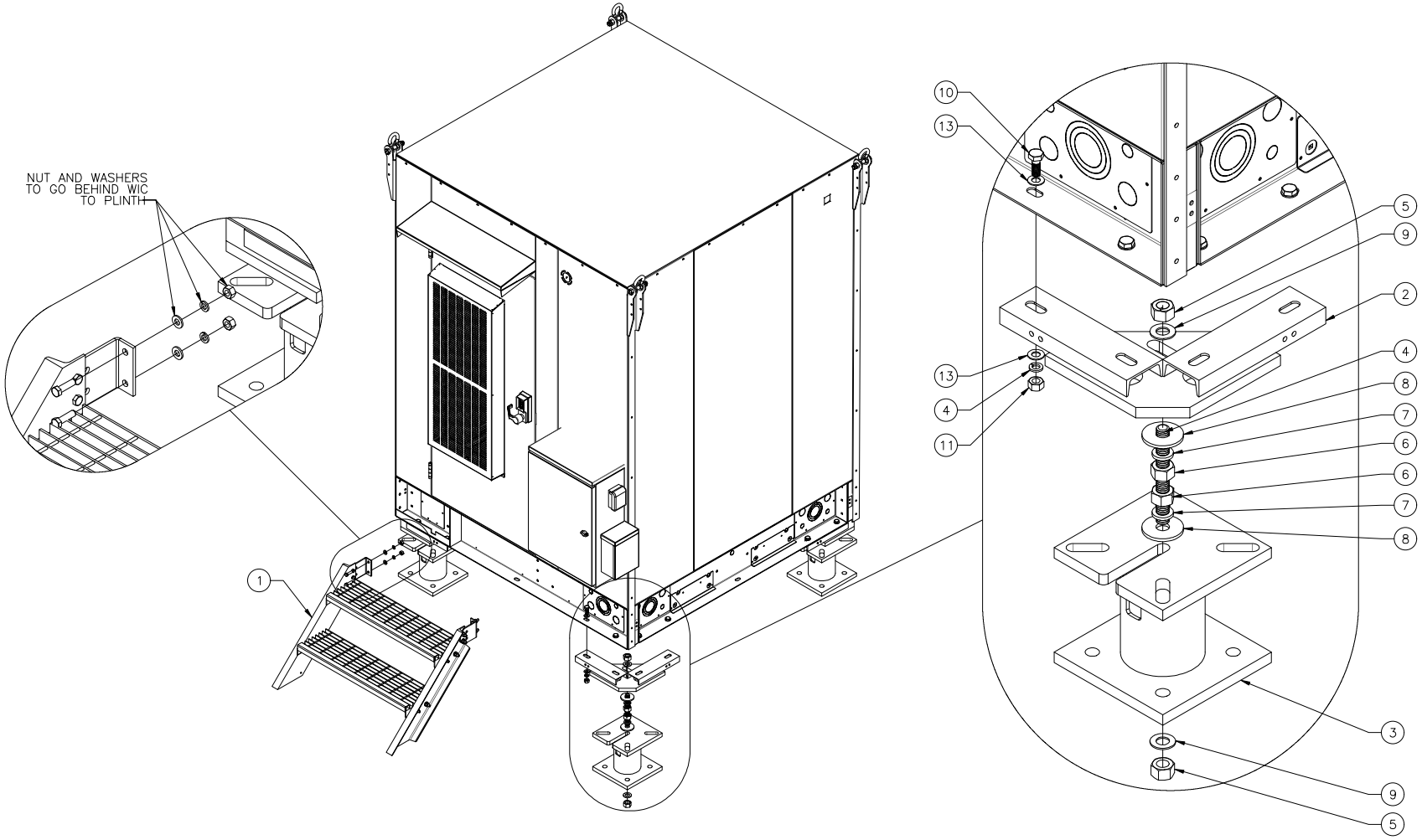


ELECTRO MECHANICAL INDUSTRIES, INC.
12230 NEESHAW DRIVE
HOUSTON, TEXAS 77065
1-800-453-0050

| SIZE | DRAWING NO. | REV |
|---|---|---|
| B | 1000-0010-0112 | 3 |

SCALE: 1:25 SHEET 2 OF 2

CONCRETE MOUNT FOUNDATION KIT

| SCALE |
|---|
| NONE |

1

APPLICANT:

The new at&t

1452 EDINGER AVENUE,
3RD FLOOR
TUSTIN, CA 92780

ENGINEER:

Eukon
an SFC Communications, Inc. Company
65 POST, SUITE 1000
IRVINE, CA 92618
TEL: (949) 553-8566
www.eukongroup.com



| | |
|---|---|
| DRAWN BY: | MG |
| CHECKED BY: | RB |

REVISIONS:

| REV | DATE | DESCRIPTION |
|---|---|---|
| 3 | 06/07/24 | PLAN CHECK |
| 2 | 03/26/24 | PLAN CHECK |
| 1 | 12/20/23 | PLAN CHECK |
| 0 | 03/27/23 | 100% CONSTRUCTION DRAWING |
| B | 03/09/23 | JURISDICTION COMMENTS |
| A | 01/12/23 | 90% CONSTRUCTION DRAWING |

LICENSEE:

REGISTERED PROFESSIONAL ENGINEER
CHRIS A. LEE
78549
CIVIL
STATE OF CALIFORNIA

06/07/24

PROJECT INFORMATION:

CLL05599

1880 LOMA VISTA DR.,
GLENDALE, CA 91208

SHEET TITLE:

EQUIPMENT
CABINET DETAILS

SHEET NUMBER:

A-12

POLAR POWER INC.

Published Rev 0 – July 15, 2020

# 20 KW DIESEL DC GENERATOR
## Part Number: 8220-100-D-20-03-V-125
## NEQ.45934

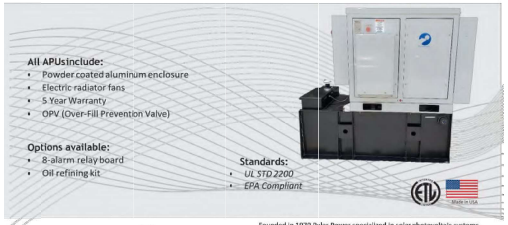

**All APUs include:**
- Powder coated aluminum enclosure
- Electric radiator fans
- 5 Year Warranty
- OPV (Over-Fill Prevention Valve)

**Options available:**
- 8-alarm relay board
- Oil refining kit

**Standards:**
- *UL STD 2200*
- *EPA Compliant*

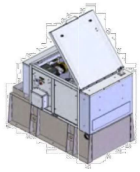

Founded in 1979 Polar Power specialized in solar photovoltaic systems, solar air conditioning and refrigeration. We developed and provided photovoltaic charging controls for telecommunications in the 1980s along with DC generators for the military. In 1994 we were first to provide DC generators with remote control and monitoring to the telecommunications industry.

Polar's success is based on engineering generators to meet the very specific needs of each application. Telecom site optimization is best met with the DC generator technology as the loads and batteries are DC. It makes no sense to install an AC generator and convert the output to DC. The AC generators are designed for a wide range of applications and they are not specifically produced for telecom applications so there are issues with reliability, space, and fuel efficiency.

Polar can save you considerable time and cost in permitting, installing, purchasing, and maintaining a backup generator. We reduce CAPEX and OPEX costs while improving backup reliability.




SMALL FOOTPRINT. Polar's DC generator is considerably smaller in size than an AC generator. You can now backup sites that could not accommodate an AC generator. Smaller also means less cost for space leasing.

LOW MAINTENANCE.

LOW ACOUSTIC NOISE. <69.3 dBA @ 7 meters (at max load), and low vibration so as not to disturb the local residents or building landlords.

CORROSION RESISTANT. All-aluminum enclosure with stainless hardware for low maintenance, and long service life.

FUEL EFFICIENT. Up to 85% fuel savings due to smaller engine displacement, high efficiency alternator, and variable speed operation.

ADVANCED MONITORING. Remote diagnostics, control, and monitoring. Ethernet and RS232 standard, with SNMP.

RODENT RESISTANT. Small animals can quickly destroy a generator set by gnawing on wires, fuel lines, radiator hoses, etc. Cooling air inlets and outlets have perforated aluminum screens to keep small rodents and large insects out. Stainless steel wire braid is placed over fuel and radiator lines to prevent damage.

LONG LIFE. Controls and wire harnesses are designed to exceed a 20 year life. Higher grade, longer life electrical wire (UL 3173), weather tight connectors, gold plated connector pins on signal circuits. No transfer switches are required.

OVER-FILL PREVENTION. Modified diesel fuel tank added to retrofit an Over-Fill Prevention Valve. This uses a float within the tank which increases the safety factor by closing the fuel inlet as diesel level rises. Special fill nozzle required.



# SPECIFICATIONS PN: 8220-100-D-20-03-V-125

## Engine

| | |
|---|---|
| Engine Model | Yanmar 3TNV88-BDSA |
| Cylinders | 3 in-line |
| Displacement (L) | 1.641 |
| Bore (in./mm) | 3.4/88 |
| Stroke (in./mm) | 3.5/90 |
| Intake Air System | Naturally Aspirated |
| Engine HP | 36 |
| Emissions | U.S. EPA Tier 4 Interim |
| Emissions Compliance | EPA and CARB Certified |
| Variable RPM | 1200 to 2900 |

## Engine lubrication system

| | |
|---|---|
| Oil Filter Type | Full flow spin-on canister |
| Oil Capacity (L) | 6.7 |
| Oil Pressure Switch (Standard) | Yes |
| Oil Pressure Transducer | Optional |

## Fuel Tank

| | |
|---|---|
| UL Rated Capacity (gal/L) | 125/473 |
| Run Time (hrs) (Calculated, dependent on gen load) | 68 to 229 |
| Tank Alarms + Visual Gage | Yes |
| OPV (over-fill prevention valve) | Yes |
| Catch Basin (gal/L) | 5/19 |
| Listings | UL 142 (double wall) |

## Fuel Tank Reserve Time (Calculated)

| Load (kW) | Reserve Time (hrs.) |
|---|---|
| 4 | 347 |
| 6 | 245 |
| 9 | 162 |
| 10 | 144 |
| 15 | 123 |
| 20 | 68 |

## Engine cooling system

| | |
|---|---|
| Type | Pressurized Aluminum Radiator |
| Water Pump | Belt-driven, Pre-lubed, self-sealing |
| Fan Type | Electric Fans |
| Airflow CFM | 1300 |
| Fan Mode | Pusher |
| Temperature Sensor | Yes |

## Environmental

| | |
|---|---|
| Operating Temperature (°C/°F) | -40 to 51.7 / -40 to 125 |
| Operating Humidity % | 100 |
| Cold Start Aids | Optional |

## Power adjustment for conditions

| | |
|---|---|
| Temperature Deration | 1% derate for every 5.6°C (10°F) above 25°C (77°F) |
| Altitude Deration | 3% derate for every 300 m (1000 ft) above 91 m (300 ft) |

## Diesel Fuel system

| | |
|---|---|
| Type | Diesel |
| Fuel Pump Type | Electrical |
| Injector Type | Mechanical |
| Fuel Filtering | Paper Element |

## Diesel Fuel Consumption (calculated)

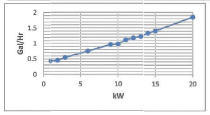




## Engine cooling

| | |
|---|---|
| System coolant capacity (gal/L) | 2.2/8.3 |

## Alternator

| | |
|---|---|
| Alternator Model | 8220 |
| Type | Permanent Magnets, NdFeB |
| Weight (lb/kg) | 46.5/21 |
| Regulation Type | Variable engine speed |
| Stator | 3 phase/32 poles |
| Overcurrent Protection (A) | 20 kW – 450 |
| Gen DC Output Disconnect Means | Pull fuse block or Circuit breaker |
| Voltage Range (VDC) | 44 to 60 |
| Alternator Exhaust Flow (cfm/cmm) | 130 to 180 / 3.68 to 5.1 |
| MTBF (hr) | 100,000+ |

## Enclosure

| | |
|---|---|
| Model | 88-25-0100 |
| Type | Weather Protective |
| Materials | Powder coated aluminum |
| Door Hardware | Two lock/latch points and removable side panels. |
| Mounting | Secure Mounting Tabs |
| Dims. | L 71" x W 40.5" x H 63.6" *(Height 74.9" including Exhaust)* |

## Weight

| | |
|---|---|
| Dry Weight (lb/kg) Includes oil and coolant. No diesel | 1371/622 |

## Starter Supercapacitor

| | |
|---|---|
| Model | 20-16-0001 |
| Storage Rating (Ah) | 500 |
| Voltage (VDC) | 13-14.4 |
| Weight (lb/kg) | 12.1/5.5 |
| Operating Temperature (°C/°F) | -40 to 65 / -40 to 149 |
| Service Life (year) | 10 to 15 |

## Charger

| | |
|---|---|
| Model | 00-10-0015 |
| Input Voltage (VDC) | 37 to 62 |
| Output Voltage (VDC) | 14 to 14.4 |
| Recharge time from 0 VDC (min) | 10 |
| Recharge time from 8 VDC (min) | 2 |
| Weight (lb/kg) | 2.2/1 |

## Standards

| | |
|---|---|
| Certification | Intertek 4003376 |
| UL Listing | UL STD 2200 |
| Standards | CSA STD C22.2 No. 100 |

## Acoustic Noise Level (dBA)
(see sound test sheets)

| | |
|---|---|
| Idle | 61.6 |
| 2.75 kW | 66.4 |
| 5.5 kW | 66.7 |
| 8.25 kW | 67.3 |
| 20 kW | 69.3 |



## Controller features

Controller Type ..... Supra Model 250
4-Line Plain Text OLED Display ..... Simple user interface for ease of operation
Engine Run Hours Indication ..... Standard
Programmable Start Delay ..... Standard
Run/Alarm/Maintenance Logs ..... Standard
Engine Start Sequence ..... Cyclic cranking: 5 sec on, 30 sec rest (6 attempts maximum)
Starter Supercapacitor Charger ..... Standard
Automatic Voltage Regulation with Over and Under Voltage Protection ..... Standard
Automatic Low Oil Pressure/High Oil Temperature Shutdown ..... Standard
Overcrank/Overspeed ..... Standard
Automatic High Engine Temperature Shutdown ..... Standard
Field Upgradeable Firmware ..... Standard
Glow Plug Delay ..... Adjustable
Engine Start Delay ..... Adjustable, Set at 30 sec
Return to Utility Delay ..... Adjustable, Set at 30 sec
Engine Cool-down ..... Adjustable, Set at 30 sec
Exercise Mode ..... Programmable

## Monitoring

Alarm monitoring and remote control through Ethernet.

## Contact closure alarm board

Shutdown Alarm ..... Standard
Warning Alarm ..... Standard
Engine Run ..... Standard
E-Stop Depressed ..... Standard

## OPV

| | |
|---|---|
| Min / Max Flow Pressure | 5 PSI / 100 PSI |
| Connection | 2" Cam Lock |
| Fluid Compatibility | Diesel, Biodiesel |
| Standards | ULC-S661-10 / NFPA 30, 30A |

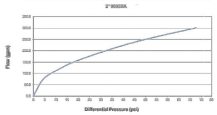




APPLICANT:

The new at&t
1452 EDINGER AVENUE,
3RD FLOOR
TUSTIN, CA 92780

ENGINEER:

Eukon
an SFC Communications, Inc. Company
65 POST, SUITE 1000
IRVINE, CA 92618
TEL: (949) 553-8566
www.eukongroup.com



| | |
|---|---|
| DRAWN BY: | MG |
| CHECKED BY: | RB |

REVISIONS:

| REV | DATE | DESCRIPTION |
|---|---|---|
| | | |
| | | |
| | | |
| | | |
| | | |
| 3 | 06/07/24 | PLAN CHECK |
| 2 | 03/26/24 | PLAN CHECK |
| 1 | 12/20/23 | PLAN CHECK |
| 0 | 03/27/23 | 100% CONSTRUCTION DRAWING |
| B | 03/09/23 | JURISDICTION COMMENTS |
| A | 01/12/23 | 90% CONSTRUCTION DRAWING |

LICENSEE:

REGISTERED PROFESSIONAL ENGINEER
CHRIS B. LEE
78549
STATE OF CALIFORNIA

06/07/24

PROJECT INFORMATION:

CLL05599

1880 LOMA VISTA DR.,
GLENDALE, CA 91208

SHEET TITLE:

GENERATOR SPECIFICATIONS

SHEET NUMBER:

GEN-1

# 8220-100-D-20-03-V-125

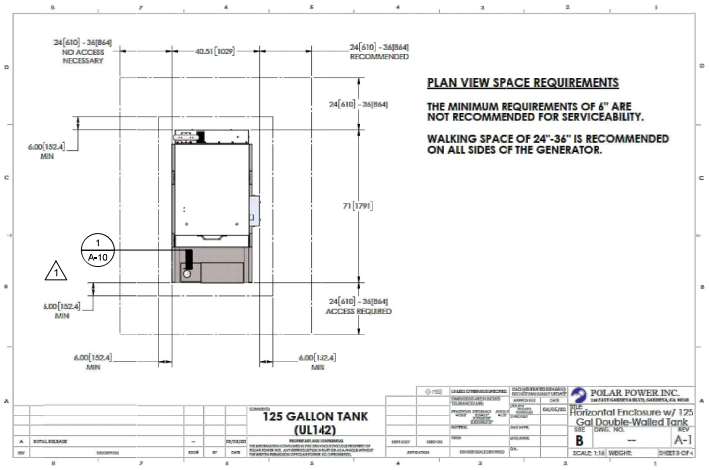




# 8220-100-D-20-03-V-125

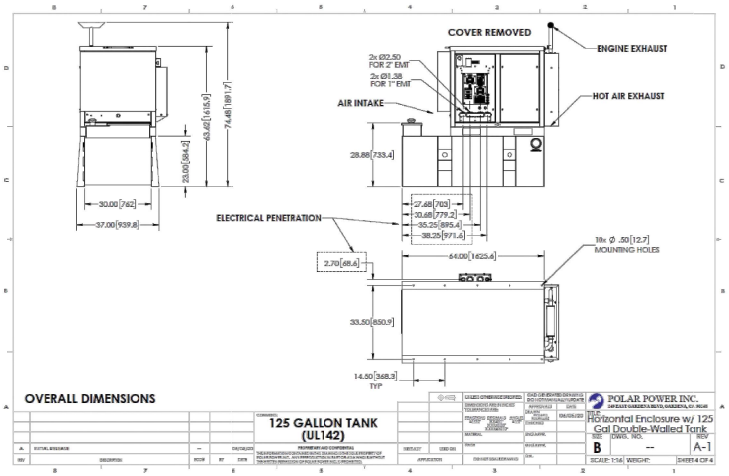




APPLICANT:

The new at&t

1452 EDINGER AVENUE,
3RD FLOOR
TUSTIN, CA 92780

ENGINEER:

Eukon
an SFC Communications, Inc. Company
65 POST, SUITE 1000
IRVINE, CA 92618
TEL: (949) 553-8566
www.eukongroup.com

THIS PAGE CONTAINS CONFIDENTIAL, PROPRIETARY OR TRADE SECRET INFORMATION EXEMPT FROM DISCLOSURE UNDER APPLICABLE LAW.

| | |
|---|---|
| DRAWN BY: | MG |
| CHECKED BY: | RB |

REVISIONS:

| REV | DATE | DESCRIPTION |
|---|---|---|
| | | |
| | | |
| | | |
| | | |
| | | |
| 3 | 06/07/24 | PLAN CHECK |
| 2 | 03/26/24 | PLAN CHECK |
| 1 | 12/20/23 | PLAN CHECK |
| 0 | 03/27/23 | 100% CONSTRUCTION DRAWING |
| B | 03/09/23 | JURISDICTION COMMENTS |
| A | 01/12/23 | 90% CONSTRUCTION DRAWING |

LICENSEE:

REGISTERED PROFESSIONAL ENGINEER
CHRIS B. LEE
78549
CIVIL
STATE OF CALIFORNIA

06/07/24

PROJECT INFORMATION:

CLL05599

1880 LOMA VISTA DR.,
GLENDALE, CA 91208

SHEET TITLE:

GENERATOR
SPECIFICATIONS

SHEET NUMBER:

GEN-2

CITY OF GLENDALE *WATER & POWER* DEPT.
**ELECTRIC SERVICE SPOT**

JOB ADDRESS 1790 1/4 LOMA VISTA DR

SERVICE SPOT DATE 10/05/2023
SERVICE PLANNER MITCH / AH
OFFICE (818) 548-3921, FAX (818) 240-4754

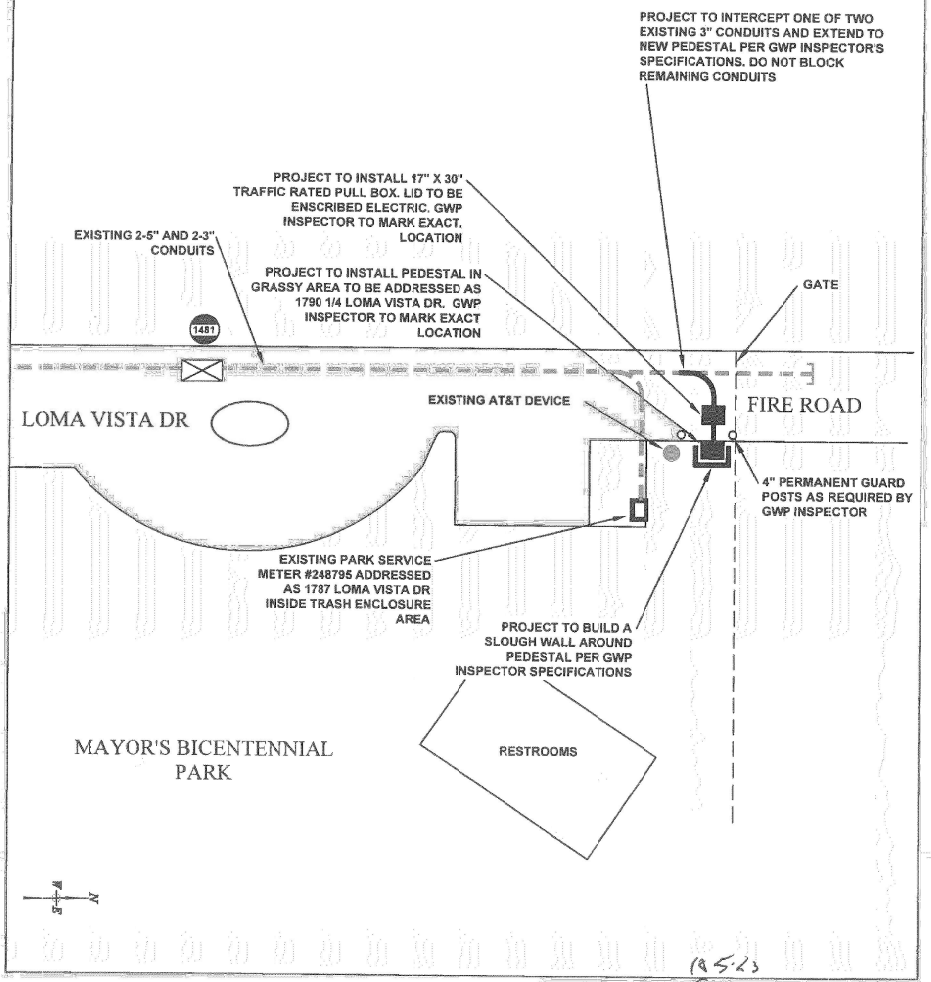


APPROVED 10-5-23 SHEET 2 OF 2

APPLICANT:

The new at&t
1452 EDINGER AVENUE,
3RD FLOOR
TUSTIN, CA 92780

ENGINEER:

Eukon
an SFC Communications, Inc. Company
65 POST, SUITE 1000
IRVINE, CA 92618
TEL: (949) 553-8566
www.eukongroup.com



| | |
|---|---|
| DRAWN BY: | MG |
| CHECKED BY: | RB |

REVISIONS:

| REV | DATE | DESCRIPTION |
|---|---|---|
| | | |
| | | |
| | | |
| | | |
| | | |
| 3 | 06/07/24 | PLAN CHECK |
| 2 | 03/26/24 | PLAN CHECK |
| 1 | 12/20/23 | PLAN CHECK |
| 0 | 03/27/23 | 100% CONSTRUCTION DRAWING |
| B | 03/09/23 | JURISDICTION COMMENTS |
| A | 01/12/23 | 90% CONSTRUCTION DRAWING |

LICENSEE:

PROJECT INFORMATION:

CLL05599

1880 LOMA VISTA DR.,
GLENDALE, CA 91208

SHEET TITLE:

UTILITY DESIGN
(FOR REFERENCE ONLY)

SHEET NUMBER:

UD-1

NOTES:
THIS SITE PLAN IS NOT INTENDED TO BE A LAND SURVEY.

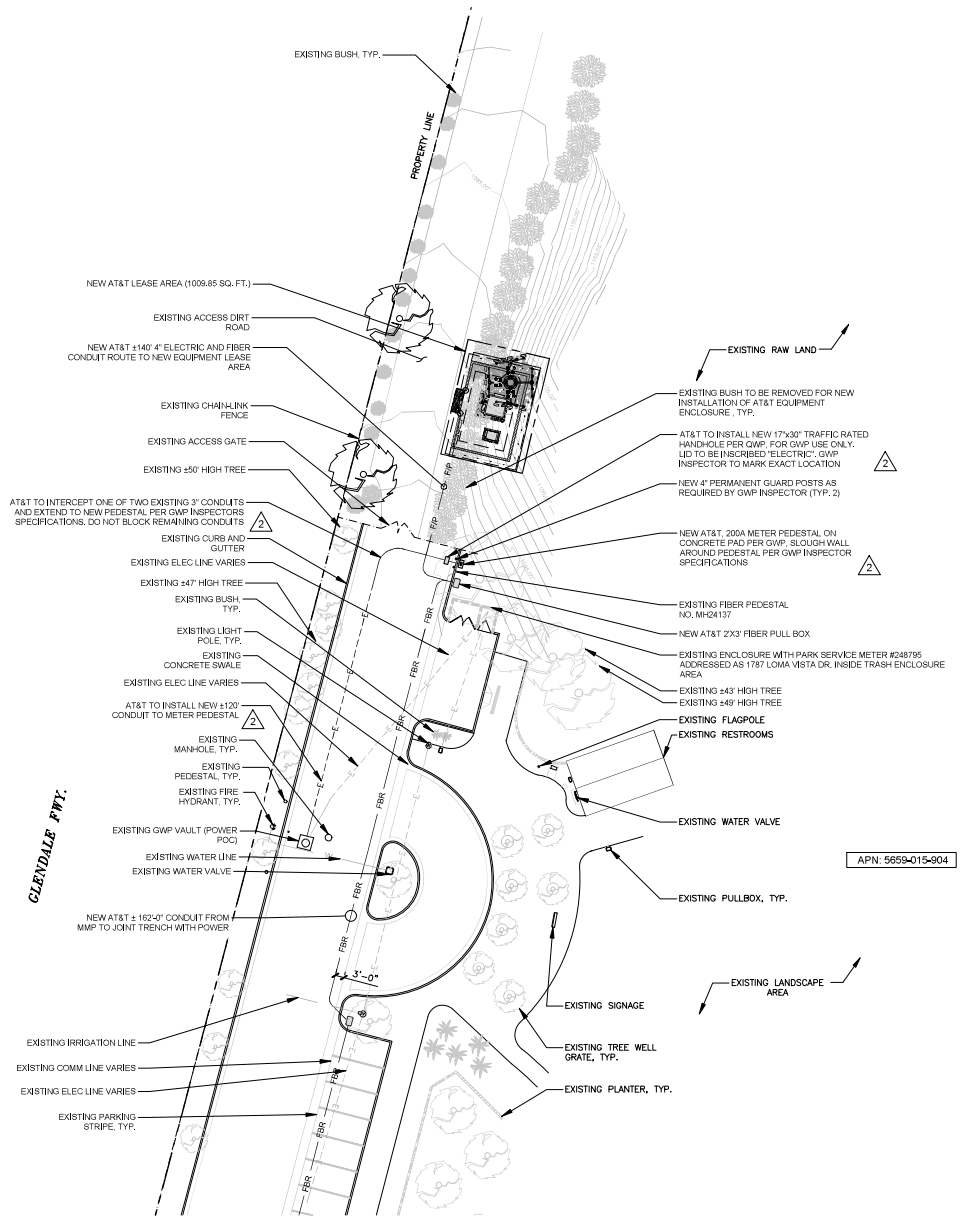


ELECTRICAL SITE PLAN

SCALE 1"=20'-0"

20' 0 10' 20' 40' 80'

1

APPLICANT:

The new at&t

1452 EDINGER AVENUE,
3RD FLOOR
TUSTIN, CA 92780

ENGINEER:

Eukon
an SFC Communications, Inc. Company
65 POST, SUITE 1000
IRVINE, CA 92618
TEL: (949) 553-8566
www.eukongroup.com



| | |
|---|---|
| DRAWN BY: | MG |
| CHECKED BY: | RB |

REVISIONS:

| REV | DATE | DESCRIPTION |
|---|---|---|
| | | |
| | | |
| | | |
| | | |
| | | |
| 3 | 06/07/24 | PLAN CHECK |
| 2 | 03/26/24 | PLAN CHECK |
| 1 | 12/20/23 | PLAN CHECK |
| 0 | 03/27/23 | 100% CONSTRUCTION DRAWING |
| B | 03/09/23 | JURISDICTION COMMENTS |
| A | 01/12/23 | 90% CONSTRUCTION DRAWING |

LICENSEE:

REGISTERED PROFESSIONAL ENGINEER
Exp. 3/31/26
ELECTRICAL
STATE OF CALIFORNIA

06/07/24

PROJECT INFORMATION:

CLL05599

1880 LOMA VISTA DR.,
GLENDALE, CA 91208

SHEET TITLE:

ELECTRICAL SITE PLAN

SHEET NUMBER:

E-1

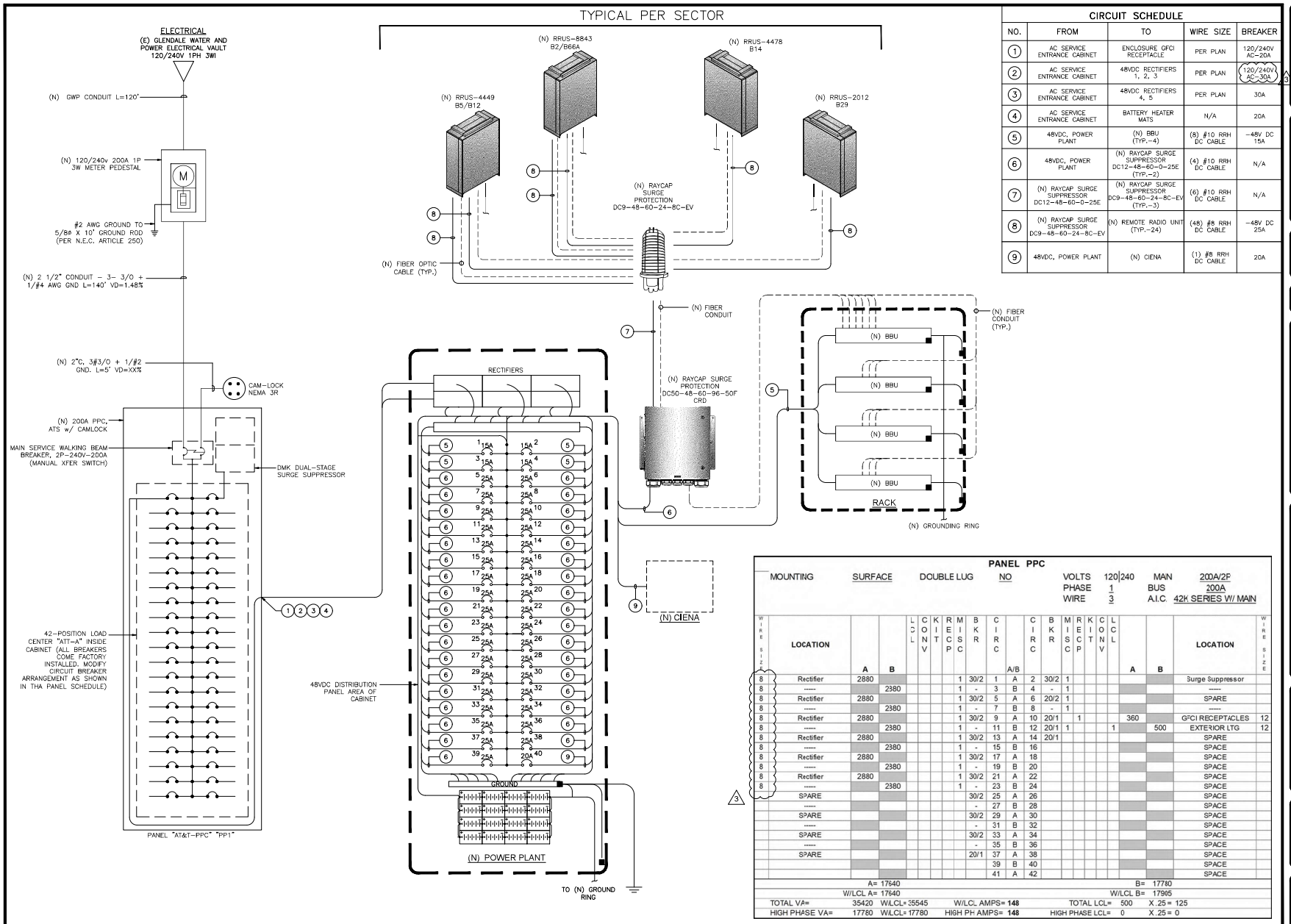


## CIRCUIT SCHEDULE

| NO. | FROM | TO | WIRE SIZE | BREAKER |
|---|---|---|---|---|
| 1 | AC SERVICE ENTRANCE CABINET | ENCLOSURE GFCI RECEPTACLE | PER PLAN | 120/240V AC-20A |
| 2 | AC SERVICE ENTRANCE CABINET | 48VDC RECTIFIERS 1, 2, 3 | PER PLAN | 120/240V AC-30A |
| 3 | AC SERVICE ENTRANCE CABINET | 48VDC RECTIFIERS 4, 5 | PER PLAN | 30A |
| 4 | AC SERVICE ENTRANCE CABINET | BATTERY HEATER MATS | N/A | 20A |
| 5 | 48VDC, POWER PLANT | (N) BBU (TYP.-4) | (8) #10 RRH DC CABLE | -48V DC 15A |
| 6 | 48VDC, POWER PLANT | (N) RAYCAP SURGE SUPPRESSOR DC12-48-60-0-25E (TYP.-2) | (4) #10 RRH DC CABLE | N/A |
| 7 | (N) RAYCAP SURGE SUPPRESSOR DC12-48-60-0-25E | (N) RAYCAP SURGE SUPPRESSOR DC9-48-60-24-8C-EV (TYP.-3) | (6) #10 RRH DC CABLE | N/A |
| 8 | (N) RAYCAP SURGE SUPPRESSOR DC9-48-60-24-8C-EV | (N) REMOTE RADIO UNIT (TYP.-24) | (48) #8 RRH DC CABLE | -48V DC 25A |
| 9 | 48VDC, POWER PLANT | (N) CIENA | (1) #8 RRH DC CABLE | 20A |

## PANEL PPC

MOUNTING: SURFACE — DOUBLE LUG — NO
VOLTS 120|240 — PHASE 1 — WIRE 3
MAIN 200A/2P — BUS 200A — A.I.C. 42K SERIES W/ MAIN

| WIRE SIZE | LOCATION | A | B | LCL | CONV | KIT | RECP | MISC | BKR | CIRC | A/B | CIRC | BKR | MISC | RECP | KIT | CONV | LCL | A | B | LOCATION | WIRE SIZE |
|---|---|---|---|---|---|---|---|---|---|---|---|---|---|---|---|---|---|---|---|---|---|---|
| 8 | Rectifier | 2880 | | | | | | 1 | 30/2 | 1 | A | 2 | 30/2 | 1 | | | | | | | Surge Suppressor | |
| 8 | ------ | | 2380 | | | | | 1 | - | 3 | B | 4 | - | 1 | | | | | | | ------ | |
| 8 | Rectifier | 2880 | | | | | | 1 | 30/2 | 5 | A | 6 | 20/2 | 1 | | | | | | | SPARE | |
| 8 | ------ | | 2380 | | | | | 1 | - | 7 | B | 8 | - | 1 | | | | | | | ------ | |
| 8 | Rectifier | 2880 | | | | | | 1 | 30/2 | 9 | A | 10 | 20/1 | | 1 | | | | 360 | | GFCI RECEPTACLES | 12 |
| 8 | ------ | | 2380 | | | | | 1 | - | 11 | B | 12 | 20/1 | 1 | | | | 1 | | 500 | EXTERIOR LTG | 12 |
| 8 | Rectifier | 2880 | | | | | | 1 | 30/2 | 13 | A | 14 | 20/1 | | | | | | | | SPARE | |
| 8 | ------ | | 2380 | | | | | 1 | - | 15 | B | 16 | | | | | | | | | SPACE | |
| 8 | Rectifier | 2880 | | | | | | 1 | 30/2 | 17 | A | 18 | | | | | | | | | SPACE | |
| 8 | ------ | | 2380 | | | | | 1 | - | 19 | B | 20 | | | | | | | | | SPACE | |
| 8 | Rectifier | 2880 | | | | | | 1 | 30/2 | 21 | A | 22 | | | | | | | | | SPACE | |
| 8 | ------ | | 2380 | | | | | 1 | - | 23 | B | 24 | | | | | | | | | SPACE | |
| | SPARE | | | | | | | | 30/2 | 25 | A | 26 | | | | | | | | | SPACE | |
| | ------ | | | | | | | | - | 27 | B | 28 | | | | | | | | | SPACE | |
| | SPARE | | | | | | | | 30/2 | 29 | A | 30 | | | | | | | | | SPACE | |
| | ------ | | | | | | | | - | 31 | B | 32 | | | | | | | | | SPACE | |
| | SPARE | | | | | | | | 30/2 | 33 | A | 34 | | | | | | | | | SPACE | |
| | ------ | | | | | | | | - | 35 | B | 36 | | | | | | | | | SPACE | |
| | SPARE | | | | | | | | 20/1 | 37 | A | 38 | | | | | | | | | SPACE | |
| | | | | | | | | | | 39 | B | 40 | | | | | | | | | SPACE | |
| | | | | | | | | | | 41 | A | 42 | | | | | | | | | SPACE | |

A= 17640 — B= 17780
W/LCL A= 17640 — W/LCL B= 17905
TOTAL VA= 35420 — W/LCL= 35545 — W/LCL AMPS= 148 — TOTAL LCL= 500 — X .25= 125
HIGH PHASE VA= 17780 — W/LCL= 17780 — HIGH PH AMPS= 148 — HIGH PHASE LCL= 0 — X .25= 0

SINGLE-LINE/AC PANEL SCHEDULE



APPLICANT:

The new at&t
1452 EDINGER AVENUE, 3RD FLOOR
TUSTIN, CA 92780

ENGINEER:

Eukon
an SFC Communications, Inc. Company
65 POST, SUITE 1000
IRVINE, CA 92618
TEL: (949) 553-8566
www.eukongroup.com



DRAWN BY: MG
CHECKED BY: RB

REVISIONS:

| REV | DATE | DESCRIPTION |
|---|---|---|
| 3 | 06/07/24 | PLAN CHECK |
| 2 | 03/26/24 | PLAN CHECK |
| 1 | 12/20/23 | PLAN CHECK |
| 0 | 03/27/23 | 100% CONSTRUCTION DRAWING |
| B | 03/09/23 | JURISDICTION COMMENTS |
| A | 01/12/23 | 90% CONSTRUCTION DRAWING |

LICENSEE:

06/07/24

PROJECT INFORMATION:

CLL05599

1880 LOMA VISTA DR.,
GLENDALE, CA 91208

SHEET TITLE:

SINGLE LINE DIAGRAM / PANEL SCHEDULE

SHEET NUMBER:

E-2

NOT USED

2

GENERAL REQUIREMENTS

A. ALL WORK AND MATERIALS SHALL BE IN ACCORDANCE WITH THE LATEST RULES AND REGULATIONS OF THE NATIONAL ELECTRIC CODE AND ALL STATE AND LOCAL CODES. NOTHING IN THESE PLANS OR SPECIFICATIONS SHALL BE CONSTRUED AS TO PERMIT WORK NOT CONFORMING TO THE MOST STRINGENT OF THESE CODES. SHOULD CHANGES BE NECESSARY IN THE DRAWINGS OR SPECIFICATIONS TO MAKE THE WORK COMPLY WITH THESE REQUIREMENTS, THE CONTRACTOR SHALL IMMEDIATELY NOTIFY THE ARCHITECT IN WRITING AND CEASE WORK ON PARTS OF THE CONTRACT WHICH ARE AFFECTED.

B. THE CONTRACTOR SHALL MAKE A SITE VISIT PRIOR TO BIDDING AND CONSTRUCTION TO VERIFY ALL EXISTING CONDITIONS AND SHALL NOTIFY THE ARCHITECT IMMEDIATELY UPON DISCOVERY OF ANY DISCREPANCIES. THE CONTRACTOR ASSUMES ALL LIABILITY FOR FAILURE TO COMPLY WITH THIS PROVISION.

C. THE EXTENT OF THE WORK IS INDICATED BY THE DRAWINGS, SCHEDULES, AND SPECIFICATIONS AND IS SUBJECT TO THE TERMS AND CONDITIONS OF THE CONTRACT. THE WORK SHALL CONSIST OF FURNISHING ALL LABOR, EQUIPMENT, MATERIALS AND SUPPLIES NECESSARY FOR A COMPLETE AND OPERATIONAL ELECTRICAL SYSTEM. THE WORK SHALL ALSO INCLUDE THE COMPLETION OF ALL ELECTRICAL WORK NOT MENTIONED OR SHOWN WHICH ARE NECESSARY FOR SUCCESSFUL OPERATION OF ALL SYSTEMS.

D. THE CONTRACTOR SHALL PREPARE A BID FOR A COMPLETE AND OPERATIONAL SYSTEM, WHICH INCLUDES THE COST FOR MATERIAL AND LABOR.

E. WORKMANSHIP AND NEAT APPEARANCE SHALL BE AS IMPORTANT AS THE OPERATION. DEFECTIVE OR DAMAGED MATERIALS SHALL BE REPLACED OR REPAIRED PRIOR TO FINAL ACCEPTANCE IN A MANNER ACCEPTABLE TO OWNER AND ENGINEER.

F. COMPLETE THE ENTIRE INSTALLATION AS SOON AS THE PROGRESS OF THE WORK WILL PERMIT, ARRANGE ANY OUTAGE OF SERVICE WITH THE OWNER AND BUILDING MANAGER IN ADVANCE. MINIMIZE DOWNTIME ON THE BUILDING ELECTRICAL SYSTEM.

G. THE ENTIRE ELECTRICAL SYSTEM INSTALLED UNDER THIS CONTRACT SHALL BE DELIVERED IN PROPER WORKING ORDER, REPLACE, WITHOUT ADDITIONAL COST TO THE OWNER, ANY DEFECTIVE MATERIAL AND EQUIPMENT WITHIN ONE YEAR FROM THE DATE OF FINAL ACCEPTANCE.

H. ANY ERROR, OMISSION OR DESIGN DISCREPANCY ON THE DRAWINGS SHALL BE BROUGHT TO THE ATTENTION OF THE ENGINEER FOR CLARIFICATION OR CORRECTION BEFORE CONSTRUCTION.

I. "PROVIDE": INDICATES THAT ALL ITEMS ARE TO BE FURNISHED, INSTALLED AND CONNECTED IN PLACE.

J. CONTRACTOR SHALL SECURE ALL NECESSARY BUILDING PERMITS AND PAY ALL REQUIRED FEES.

EQUIPMENT LOCATION

A. THE DRAWINGS INDICATE DIAGRAMMATICALLY THE DESIRED LOCATIONS OR ARRANGEMENTS OF CONDUIT RUNS, OUTLETS, EQUIPMENT, ETC., AND ARE TO BE FOLLOWED AS CLOSELY AS POSSIBLE. PROPER JUDGMENT MUST BE EXERCISED IN EXECUTING THE WORK SO AS TO SECURE THE BEST POSSIBLE INSTALLATION IN THE AVAILABLE SPACE AND TO OVERCOME LOCAL DIFFICULTIES DUE TO SPACE LIMITATIONS OR INTERFERENCE OF STRUCTURE CONDITIONS ENCOUNTERED.

B. IN THE EVENT CHANGES IN THE INDICATED LOCATIONS OR ARRANGEMENTS ARE NECESSARY, DUE TO FIELD CONDITIONS IN THE BUILDING CONSTRUCTION OR REARRANGEMENT OF FURNISHINGS OR EQUIPMENT, SUCH CHANGES SHALL BE MADE WITHOUT COST, PROVIDING THE CHANGE IS ORDERED BEFORE THE CONDUIT RUNS, ETC., AND WORK DIRECTLY CONNECTED TO THE SAME IS INSTALLED AND NO EXTRA MATERIALS ARE REQUIRED.

C. LIGHTING FIXTURES ARE SHOWN IN THEIR APPROXIMATE LOCATIONS ONLY. COORDINATE THE FIXTURE LOCATION WITH MECHANICAL EQUIPMENT TO AVOID INTERFERENCE.

D. COORDINATE THE WORK OF THIS SECTION WITH THAT OF ALL OTHER TRADES. WHERE CONFLICTS OCCUR, CONSULT WITH THE RESPECTIVE CONTRACTOR AND COME TO AGREEMENT AS TO CHANGES NECESSARY. OBTAIN WRITTEN ACCEPTANCE FROM ENGINEER FOR THE PROPOSED CHANGES BEFORE PROCEEDING.

SHOP DRAWINGS

A. SUBMIT SIX (6) COPIES OF SHOP DRAWINGS TO THE ARCHITECT FOR APPROVAL WITHIN 35 DAYS OF AWARD OF CONTRACT. SHOP DRAWINGS SHALL BE SUBMITTED IN A COMPLETE BOUND MANUAL INCLUDING LIGHT FIXTURES, SERVICE METERING, TRANSFER SWITCH, PANELBOARD, AND DISCONNECT SWITCHES. THE CONTRACTOR SHALL VERIFY DIMENSIONS OF EQUIPMENT TO INSURE THAT THEY FIT IN THE DESIGNATED AREA AND COMPLY WITH REQUIREMENTS OF ALL APPLICABLE CODES FOR REQUIRED WORKING CLEARANCES ABOUT ELECTRICAL EQUIPMENT PRIOR TO SUBMITTING SHOP DRAWINGS FOR APPROVAL. DEPARTURE FROM THE ABOVE WILL RESULT IN RE-SUBMITTAL AND DELAYS.

SUBSTITUTIONS

A. NO SUBSTITUTIONS ARE ALLOWED.

TESTS

A. BEFORE FINAL ACCEPTANCE OF WORK, THE CONTRACTOR SHALL INSURE THAT ALL EQUIPMENT, SYSTEMS, FIXTURES, ETC., ARE WORKING SATISFACTORILY AND TO THE INTENT OF THE DRAWINGS.

PERMITS

A. THE CONTRACTOR SHALL BE RESPONSIBLE FOR TAKING OUT AND PAYING FOR ALL THE REQUIRED PERMITS, INSPECTION AND EXAMINATION WITHOUT ADDITIONAL EXPENSE TO THE OWNER.

GROUNDING

A. THE CONTRACTOR SHALL PROVIDE A COMPLETE, AND APPROVED GROUNDING SYSTEM INCLUDING ELECTRODES, ELECTRODE CONDUCTOR, BONDING CONDUCTORS, AND EQUIPMENT CONDUCTORS AS REQUIRED BY ARTICLE 250 OF NATIONAL ELECTRICAL CODE.

B. CONDUITS CONNECTED TO EQUIPMENT AND DEVICES SHALL BE METALLICALLY JOINED TOGETHER TO PROVIDE EFFECTIVE ELECTRICAL CONTINUITY.

C. FEEDERS AND BRANCH CIRCUIT WIRING INSTALLED IN A NONMETALLIC CONDUIT SHALL INCLUDE A CODE SIZED GROUNDING CONDUCTOR HAVING GREEN INSULATION. THE GROUND CONDUCTOR SHALL BE PROPERLY CONNECTED AT BOTH ENDS TO MAINTAIN ELECTRICAL CONTINUITY.

D. REFER TO GROUND BUS DETAILS, PROVIDE NEW GROUND SYSTEM COMPLETE WITH CONDUCTORS, GROUND ROD AND DESCRIBED TERMINATIONS.

E. ALL GROUNDING CONDUCTORS SHALL BE SOLIDINNED COPPER AND ANNEALED #2 UNLESS NOTED OTHERWISE.

F. ALL NON-DIRECT BURIED TELEPHONE EQUIPMENT GROUND CONDUCTORS SHALL BE #2 STRANDED, THHN (GREEN) INSULATION.

G. ALL GROUND CONNECTIONS SHALL BE MADE WITH "HYGROUND" COMPRESSION SYSTEM BURNDY CONNECTORS EXCEPT WHERE NOTED OTHERWISE.

H. PAINT AT ALL GROUND CONNECTIONS SHALL BE REMOVED.

I. GROUNDING SYSTEM RESISTANCE SHALL NOT EXCEED 5 OHMS. IF THE RESISTANCE VALUE IS EXCEEDED, NOTIFY THE OWNER FOR FUTURE INSTRUCTION ON METHODS FOR REDUCING THE RESISTANCE VALUE. SUBMIT TEST REPORTS AND FURNISH TO SMART SMR ONE COMPLETE SET OF PRINTS SHOWING "INSTALLED WORK".

UTILITY SERVICE

A. TELEPHONE AND ELECTRICAL METERING FACILITIES SHALL CONFORM TO THE REQUIREMENTS OF THE SERVING UTILITY COMPANIES. CONTRACTOR SHALL VERIFY SERVICE LOCATIONS AND REQUIREMENTS. SERVICE INFORMATION WILL BE FURNISHED BY THE SERVING UTILITIES.

B. CONFORM TO ALL REQUIREMENTS OF THE SERVING UTILITY COMPANIES.

PRODUCTS

A. ALL MATERIALS SHALL BE NEW, CONFORMING WITH THE NEC, ANSI, NEMA, AND THEY SHALL BE U.L. LISTED AND LABELED.

B. CONDUIT

1. RIGID CONDUIT SHALL BE U.L. LABEL GALVANIZED ZINC COATED WITH ZINC INTERIOR AND SHALL BE USED WHEN INSTALLED IN OR UNDER CONCRETE SLABS, IN CONTACT WITH THE EARTH, UNDER PUBLIC ROADWAYS, IN MASONRY WALLS OR EXPOSED ON BUILDING EXTERIOR. RIGID CONDUIT IN CONTACT WITH EARTH SHALL BE 1/2 LAPPED WRAPPED WITH HUNTS WRAP PROCESS NO. 3.

2. ELECTRICAL METALLIC TUBING SHALL HAVE U.L. LABEL, FITTINGS SHALL BE COMPRESSION TYPE. EMT SHALL BE USED ONLY FOR INTERIOR RUNS.

3. FLEXIBLE METALLIC CONDUIT SHALL HAVE U.L. LISTED LABEL AND MAY BE USED WHERE PERMITTED BY CODE. FITTINGS SHALL BE "JAKE" OR "SQUEEZE" TYPE, SEAL TIGHT FLEXIBLE CONDUIT. ALL CONDUIT IN EXCESS OF SIX FEET IN LENGTH SHALL HAVE FULL SIZE GROUND WIRE.

4. CONDUIT RUNS MAY BE SURFACE MOUNTED IN CEILING OR WALLS UNLESS INDICATED OTHERWISE. CONDUIT INDICATED SHALL RUN PARALLEL OR AT RIGHT ANGLES TO CEILING, FLOOR OR BEAMS. VERIFY EXACT ROUTING OF ALL EXPOSED CONDUIT WITH ARCHITECT PRIOR TO INSTALLING.

5. ALL UNDERGROUND CONDUITS SHALL BE PVC SCHEDULE 40 (UNLESS NOTED OTHERWISE) AT A MINIMUM DEPTH OF 24" BELOW GRADE.

6. ALL CONDUIT ONLY (C.O.) SHALL HAVE PULL ROPE.

7. CONDUITS RUN ON ROOFS SHALL BE INSTALLED ON 4 X 4 REDWOOD SLEEPERS, 6'-0" ON CENTER, SET IN NON-HARDENING MASTIC.

C. ALL WIRE AND CABLE SHALL BE COPPER, 600 VOLT, #12 AWG MINIMUM UNLESS SPECIFICALLY NOTED OTHERWISE ON THE DRAWINGS. CONDUCTORS #10 AWG AND SMALLER SHALL BE SOLID, CONDUCTORS #8 AWG AND LARGER SHALL BE STRANDED. TYPE THHN INSULATION USED UNLESS CONDUCTORS INSTALLED IN CONDUIT EXPOSED TO WEATHER, IN WHICH CASE TYPE THWN INSULATION SHALL BE USED.

D. PROVIDE GALVANIZED COATED STEEL BOXES AND ACCESSORIES SIZED PER CODE TO ACCOMMODATE ALL DEVICES AND WIRING.

E. DUPLEX RECEPTACLES SHALL BE SPECIFICATION GRADE WITH WHITE FINISH (UNLESS NOTED BY ENGINEER). 20 AMP, 125 VOLT, THREE WIRE GROUNDING TYPE, NEMA 5-20R. MOUNT RECEPTACLE AT +12" ABOVE FINISHED FLOOR UNLESS OTHERWISE INDICATED ON DRAWINGS OR IN DETAILS. WEATHERPROOF RECEPTACLES SHALL BE GROUND FAULT INTERRUPTER TYPE WITH SIERRA #WPD-8 LIFT COVERPLATES.

F. TOGGLE SWITCHES SHALL BE 20 AMP, 120 VOLT AC, SPECIFICATION GRADE WHITE (UNLESS NOTED OTHERWISE) FINISH. MOUNT SWITCHES AT +48" ABOVE FINISHED FLOOR.

G. PANELBOARDS SHALL BE DEAD FRONT SAFETY TYPE WITH ANTI-BURN SOLDERLESS COMPRESSION APPROVED FOR COPPER CONDUCTORS, COPPER BUS BARS, FULL SIZED NEUTRAL BUS, GROUND BUS AND EQUIPPED WITH QUICK-MAKE QUICK-BREAK BOLT-IN TYPE THERMAL MAGNETIC CIRCUIT BREAKERS. MOUNT TOP OF THE PANELBOARDS AT 6'-3" ABOVE FINISHED FLOOR. PROVIDE TYPEWRITTEN CIRCUIT DIRECTORY.

H. ALL CIRCUIT BREAKERS, MAGNETIC STARTERS AND OTHER ELECTRICAL EQUIPMENT SHALL HAVE AN INTERRUPTING RATING NOT LESS THAN MAXIMUM SHORT CIRCUIT CURRENT TO WHICH THEY MAY BE SUBJECTED.

I. GROUND RODS SHALL BE COPPER CLAD STEEL, 5/8" ROUND AND 10' LONG. COPPER WELD OR APPROVED EQUAL.

INSTALLATION

A. PROVIDE SUPPORTING DEVICES FOR ALL ELECTRICAL EQUIPMENT, FIXTURES, BOXES, PANEL, ETC., SUPPORT LUMINARIES FROM UNDERSIDE OF STRUCTURAL CEILING. EQUIPMENT SHALL BE BRACED TO WITHSTAND HORIZONTAL FORCES IN ACCORDANCE WITH STATE AND LOCAL CODE REQUIREMENTS. PROVIDE PRIOR ALIGNMENT AND LEVELING OF ALL DEVICES AND FIXTURES.

B. CUTTING, PATCHING, CHASES, OPENINGS: PROVIDE LAYOUT IN ADVANCE TO ELIMINATE UNNECESSARY CUTTING OR DRILLING OF WALLS, FLOORS CEILINGS, AND ROOFS. ANY DAMAGE TO BUILDING STRUCTURE OR EQUIPMENT SHALL BE REPAIRED BY THE CONTRACTOR. OBTAIN PERMISSION FROM THE ENGINEER BEFORE CORING.

C. IN DRILLING HOLES INTO CONCRETE WHETHER FOR FASTENING OR ANCHORING PURPOSES, OR PENETRATIONS THROUGH THE FLOOR FOR CONDUIT RUNS, PIPE RUNS, ETC., IT MUST BE CLEARLY UNDERSTOOD THAT TENDONS AND/OR REINFORCING STEEL WILL NOT BE DRILLED INTO, CUT OR DAMAGED UNDER ANY CIRCUMSTANCES.

D. LOCATION OF TENDONS AND/OR REINFORCING STEEL ARE NOT DEFINITELY KNOWN AND THEREFORE, MUST BE SEARCHED FOR BY APPROPRIATE METHODS AND EQUIPMENT VIA X-RAY OR OTHER DEVICES THAT CAN ACCURATELY LOCATE THE REINFORCING AND/OR STEEL TENDONS.

E. PENETRATIONS IN FIRE RATED WALLS SHALL BE FIRE STOPPED IN ACCORDANCE WITH THE REQUIREMENTS OF THE C.B.C.

PROJECT CLOSEOUT

A. UPON COMPLETION OF WORK, CONDUCT CONTINUITY, SHORT CIRCUIT, AND FALL POTENTIAL GROUNDING TESTS FOR APPROVAL. SUBMIT TEST REPORTS TO PROJECT MANAGER. CLEAN PREMISES OF ALL DEBRIS RESULTING FROM WORK AND LEAVE WORK IN A COMPLETE AND UNDAMAGED CONDITION.

B. PROVIDE PROJECT MANAGER WITH ONE SET OF COMPLETE ELECTRICAL "AS INSTALLED" DRAWINGS AT THE COMPLETION OF THE JOB, SHOWING ACTUAL DIMENSIONS, ROUTINGS AND CIRCUITS.

C. ALL BROCHURES, OPERATING MANUALS, CATALOG, SHOP DRAWINGS, ETC., SHALL BE TURNED OVER TO OWNER AT JOB COMPLETION.

GROUNDING NOTES

1. ALL DETAILS ARE SHOWN IN GENERAL TERMS. ACTUAL GROUNDING INSTALLATION REQUIREMENTS AND CONSTRUCTION ACCORDING TO SITE CONDITIONS.

2. ALL GROUNDING CONDUCTORS: #2 AWG SOLID BARE TINNED COPPER WIRE UNLESS OTHERWISE NOTED.

3. GROUND BAR LOCATED IN BASE OF EQUIPMENT WILL BE PROVIDED, FURNISHED AND INSTALLED BY THE VENDOR.

4. ALL BELOW GRADE CONNECTIONS: EXOTHERMIC WELD TYPE, ABOVE GRADE CONNECTIONS: EXOTHERMIC WELD TYPE.

5. GROUND RING SHALL BE LOCATED A MINIMUM OF 24" BELOW GRADE OR 6" MINIMUM BELOW THE FROST LINE.

6. INSTALL GROUND CONDUCTORS AND GROUND ROD MINIMUM OF 1-0" FROM EQUIPMENT CONCRETE SLAB, SPREAD FOOTING, OR FENCE.

7. EXOTHERMIC WELD GROUND CONNECTION TO FENCE POST: TREAT WITH A COLD GALVANIZED SPRAY.

8. GROUND BARS:

8.1. EQUIPMENT GROUND BUS BAR (EGB) LOCATED AT BOTTOM OF ANTENNA POLE/MAST FOR GROUNDING JUMPER CONNECTIONS TO COAX FEEDER CABLES SHALL BE FURNISHED AND INSTALLED BY ELECTRICAL CONTRACTOR. JUMPERS (FURNISHED BY OWNERS) SHALL BE INSTALLED AND CONNECTED BY ELECTRICAL CONTRACTOR.

8.2. MAIN GROUND BUS BAR (MGB) LOCATED NEAR THE BASE OF THE RADIO EQUIPMENT CABINET(S) SHALL BE FURNISHED AND INSTALLED BY ELECTRICAL CONTRACTOR.

9. ALL GROUNDING INSTALLATIONS AND CONNECTIONS SHALL BE MADE BY ELECTRICAL CONTRACTOR.

10. OBSERVE N.E.C. AND LOCAL UTILITY REQUIREMENTS FOR ELECTRICAL SERVICE GROUNDING.

11. GROUNDING ATTACHMENT TO TOWER SHALL BE AS PER MANUFACTURER'S RECOMMENDATIONS OR AT GROUNDING POINTS PROVIDED (2 MINIMUM).

12. IF EQUIPMENT IS IN A C.L. FENCE ENCLOSURE, GROUND ONLY CORNER POSTS AND SUPPORT POSTS OF GATE. IF CHAIN LINK LID IS USED, THEN GROUND LID ALSO.

13. GROUNDING @ PPC CABINET SHALL BE VERTICALLY INSTALLED.

14. ALL GROUNDING FOR ANTENNAS SHALL BE CONNECTED SO THAT IT WILL BY-PASS MAIN BUSS BAR.

15. ALL EMT RUNS SHALL BE GROUNDED AND HAVE A BUSHING. NO PVC ABOVE GROUND.

16. USE SEPARATE HOLES FOR GROUNDING @ BUSS BAR. NO "DOUBLING-UP" OF LUGS.

17. POWER AND TELCO CABS. SHALL BE GROUNDED (BONDED) TOGETHER.18. NO "L AND B" ALLOWED ON GROUNDING.

18. PROVIDE STAINLESS STEEL CLAM AND BRASS TAGS ON COAX @ ANTENNAS AND DOGHOUSE.

ELECTRICAL NOTES

1

APPLICANT:

The new at&t

1452 EDINGER AVENUE,
3RD FLOOR
TUSTIN, CA 92780

ENGINEER:

Eukon
an SFC Communications, Inc. Company
65 POST, SUITE 1000
IRVINE, CA 92618
TEL: (949) 553-8566
www.eukongroup.com



| | |
|---|---|
| DRAWN BY: | MG |
| CHECKED BY: | RB |

REVISIONS:

| REV | DATE | DESCRIPTION |
|---|---|---|
| | | |
| | | |
| | | |
| | | |
| | | |
| 3 | 06/07/24 | PLAN CHECK |
| 2 | 03/26/24 | PLAN CHECK |
| 1 | 12/20/23 | PLAN CHECK |
| 0 | 03/27/23 | 100% CONSTRUCTION DRAWING |
| B | 03/09/23 | JURISDICTION COMMENTS |
| A | 01/12/23 | 90% CONSTRUCTION DRAWING |

LICENSEE:

REGISTERED PROFESSIONAL ENGINEER
Exp. 3/31/26
ELECTRICAL
STATE OF CALIFORNIA

06/07/24

PROJECT INFORMATION:

CLL05599

1880 LOMA VISTA DR.,
GLENDALE, CA 91208

SHEET TITLE:

ELECTRICAL NOTES

SHEET NUMBER:

E-3

| | |
|---|---|
| EXOTHERMIC | ■ |
| COMPRESSION TYPE CONNECTIONS | ● |
| CHEMICAL ELECTROLYTIC GROUNDING SYSTEM | ⊗ |
| GROUND ROD | |
| GROUND ROD WITH INSPECTION SLEEVE | |
| TEST GROUND ROD WITH INSPECTION SLEEVE | |
| EXOTHERMIC WITH INSPECTION SLEEVE | |
| GROUNDING CONDUCTOR | |
| GROUNDING BAR | |

THIS PLAN IS A SCHEMATIC ONLY AND DOES NOT SHOW ALL THE GROUNDING PROVIDED BY THE SHELTER MANUFACTURER. CONTRACTOR SHALL NOTIFY AT&T IF ANY GROUNDING TO BE PROVIDED IS INCOMPLETE OR MISSING.

NOTE:
CONTRACTOR TO IMPLEMENT ALL GROUNDING REQUIREMENTS AS SPECIFIED BY CARRIER CONSTRUCTION AND INSTALLATION GUIDELINES.

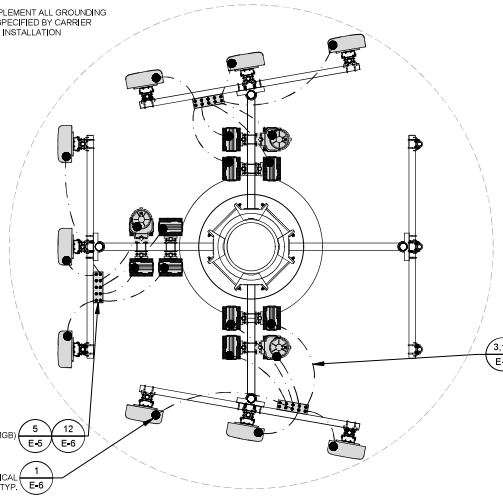


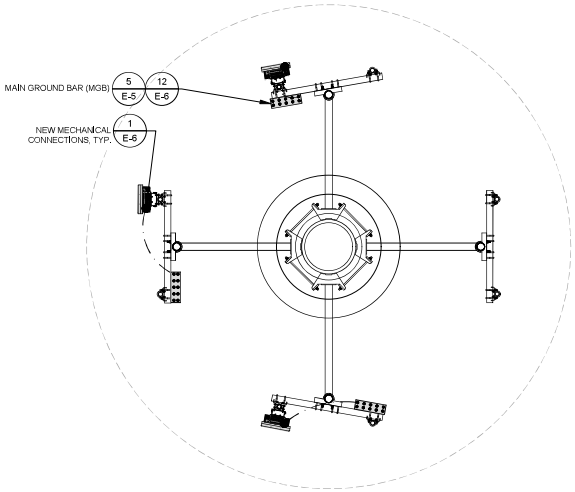


ANTENNA GROUNDING PLAN

SCALE NONE | 2

| | |
|---|---|
| EXOTHERMIC | ■ |
| COMPRESSION TYPE CONNECTIONS | ● |
| CHEMICAL ELECTROLYTIC GROUNDING SYSTEM | ⊗ |
| GROUND ROD | |
| GROUND ROD WITH INSPECTION SLEEVE | |
| TEST GROUND ROD WITH INSPECTION SLEEVE | |
| EXOTHERMIC WITH INSPECTION SLEEVE | |
| GROUNDING CONDUCTOR | |
| GROUNDING BAR | |

THIS PLAN IS A SCHEMATIC ONLY AND DOES NOT SHOW ALL THE GROUNDING PROVIDED BY THE SHELTER MANUFACTURER. CONTRACTOR SHALL NOTIFY AT&T IF ANY GROUNDING TO BE PROVIDED IS INCOMPLETE OR MISSING.

NOTE:
CONTRACTOR TO IMPLEMENT ALL GROUNDING REQUIREMENTS AS SPECIFIED BY CARRIER CONSTRUCTION AND INSTALLATION GUIDELINES.

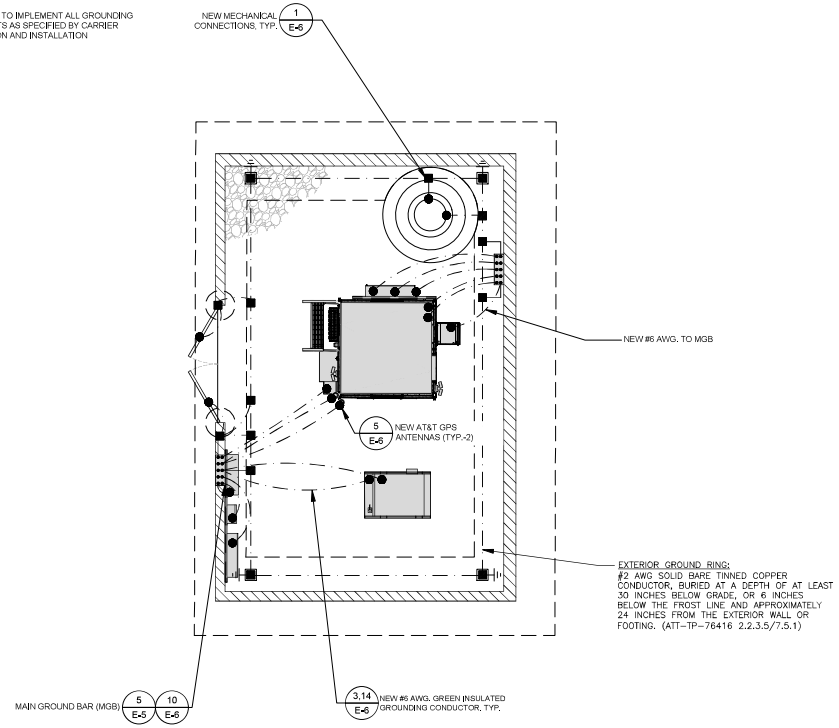


EQUIPMENT GROUNDING PLAN

SCALE NONE | 1

APPLICANT:

The new at&t

1452 EDINGER AVENUE,
3RD FLOOR
TUSTIN, CA 92780

ENGINEER:

Eukon
an SFC Communications, Inc. Company
65 POST, SUITE 1000
IRVINE, CA 92618
TEL: (949) 553-8566
www.eukongroup.com



| | |
|---|---|
| DRAWN BY: | MG |
| CHECKED BY: | RB |

REVISIONS:

| REV | DATE | DESCRIPTION |
|---|---|---|
| | | |
| | | |
| | | |
| | | |
| | | |
| 3 | 06/07/24 | PLAN CHECK |
| 2 | 03/26/24 | PLAN CHECK |
| 1 | 12/20/23 | PLAN CHECK |
| 0 | 03/27/23 | 100% CONSTRUCTION DRAWING |
| B | 03/09/23 | JURISDICTION COMMENTS |
| A | 01/12/23 | 90% CONSTRUCTION DRAWING |

LICENSEE:

REGISTERED PROFESSIONAL ENGINEER
Exp. 3/31/26
ELECTRICAL
STATE OF CALIFORNIA

06/07/24

PROJECT INFORMATION:

CLL05599

1880 LOMA VISTA DR.,
GLENDALE, CA 91208

SHEET TITLE:

ANTENNA & EQUIPMENT GROUNDING PLAN

SHEET NUMBER:

E-4

## NOT USED

| SCALE | |
|---|---|
| NONE | 8 |

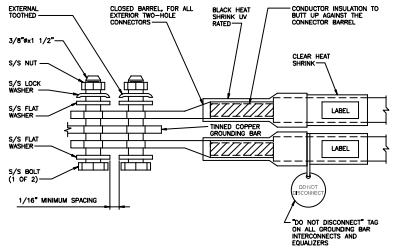


## EXTERIOR TWO HOLE LUG

| SCALE | |
|---|---|
| NONE | 7 |

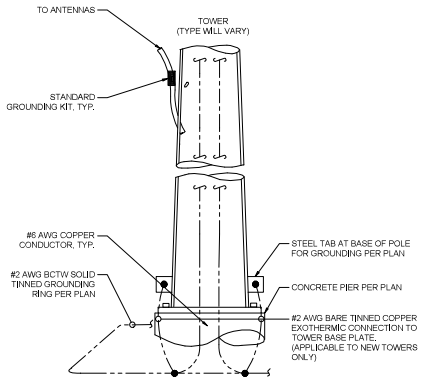


## TOWER GROUNDING

| SCALE | |
|---|---|
| NONE | 6 |

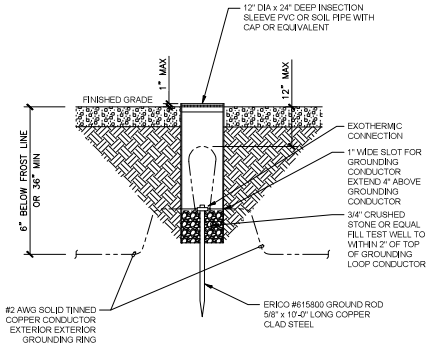


## GROUND ROD W/ INSPECTION SLEEVE

| SCALE | |
|---|---|
| NONE | 4 |

NOTES:

1. EXOTHERMIC WELD #2 AWG BARE TINNED SOLID COPPER CONDUCTOR TO GROUND BAR. ROUTE CONDUCTOR TO BURIED GROUND RING AND PROVIDE PARALLEL EXOTHERMIC WELD.
2. ALL GROUND BARS SHALL BE STAMPED IN TO THE METAL "IF STOLEN DO NOT RECYCLE." THE CONTRACTOR SHALL USE PERMANENT MARKER TO DRAW THE LINES BETWEEN EACH SECTION AND LABEL EACH SECTION ("P", "A", "I") WITH 1" HIGH LETTERS.
3. ALL HARDWARE SHALL BE STAINLESS STEEL 3/8" DIAMETER OR LARGER. ALL HARDWARE 18-8 STAINLESS STEEL INCLUDING LOCK WASHERS. COAT ALL SURFACES WITH AN ANTI-OXIDANT COMPOUND BEFORE MATING.
4. FOR GROUND BOND TO STEEL ONLY: INSERT A CADMIUM FLAT WASHER BETWEEN LUG AND STEEL. COAT ALL SURFACES WITH AN ANTI-OXIDANT COMPOUND BEFORE MATING.
5. DO NOT INSTALL CABLE GROUND KIT AT A BEND AND ALWAYS DIRECT GROUNDING CONDUCTOR DOWN TO GROUNDING BUS.
6. NUT & WASHER SHALL BE PLACED ON THE FRONT SIDE OF THE GROUND BAR AND BOLTED ON THE BACK SIDE. INSTALL BLACK HEAT-SHRINKING TUBE, 600 VOLT INSULATION. ON ALL GROUNDING TERMINATIONS. THE INTENT IS TO WEATHERPROOF THE COMPRESSION CONNECTION.
7. SUPPLIED AND INSTALLED BY CONTRACTOR.
8. THE CONTRACTOR SHALL BE RESPONSIBLE FOR INSTALLING ADDITIONAL GROUND BARS AS REQUIRED, PROVIDING 50% SPARE CONNECTION POINTS.
9. ENSURE THE WIRE INSULATION TERMINATION IS WITHIN 1/8" OF THE BARREL (NO SHINERS).

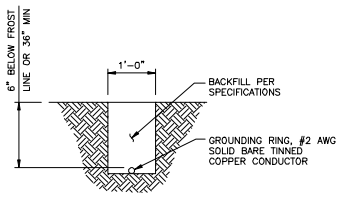


## GROUND RING TRENCH

| SCALE | |
|---|---|
| NONE | 2 |

| NEWTON INSTRUMENT COMPANY, INC. BUTNER, N.C. | | | |
|---|---|---|---|
| NO | REQUIRED | PART NUMBER | DESCRIPTION |
| 1 | 1 | 1/4"x4"x30" | SOLID GROUND BAR |
| 2 | 2 | A-6056 | WALL MOUNTING BRACKET |
| 3 | 2 | 3061-4 | INSULATORS |
| 4 | 4 | 3012-1 | 5/8"-11x1" H.H.C.S. |
| 5 | 4 | 3015-8 | 5/8" LOCKWASHER |

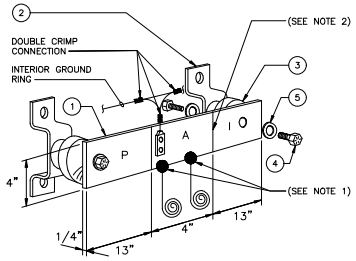


EACH GROUNDING CONDUCTOR TERMINATING ON ANY GROUND BAR SHALL HAVE AN IDENTIFICATION TAG ATTACHED AT EACH END THAT WILL IDENTIFY ITS ORIGIN AND DESTINATION

SECTION "P" - SURGE PROTECTORS

(EC) CELL REFERENCE GROUND BAR (IF COLLOCATED)
(EC) GENERATOR FRAMEWORK (IF AVAILABLE) (#2 AWG)
(EC) TELCO GROUND BAR (#2 AWG)
(EC) COMMERCIAL POWER COMMON NEUTRAL/GROUNDING BOND (3/0)
(EC) FIBER GROUND BAR (#2 AWG)
(EC) POWER ROOM REFERENCE GROUND BAR (#2 AWG)
(AT&T) RECTIFIER FRAMES

SECTION "A" - SURGE ABSORBERS

(EC) INTERIOR GROUND RING (#2 AWG)
(EC) EXTERNAL EARTH GROUNDING FIELD (BURIED GROUND RING) (#2 AWG)
(EC) METALLIC COLD WATER PIPE (IF AVAILABLE) (1/0 AWG)
(EC) BUILDING STEEL (IF AVAILABLE) (1/0 AWG)

SECTION "I" - ISOLATED GROUNDING ZONE

(AT&T) ALL ISOLATED GROUNDING REFERENCE
(AT&T) GROUND WINDOW BAR

## MAIN GROUNDING BAR

| SCALE | |
|---|---|
| NONE | 5 |

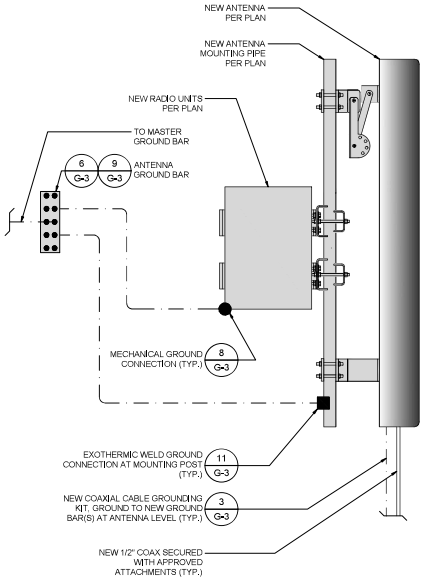


## ANTENNA GROUNDING

| SCALE | |
|---|---|
| NONE | 3 |

NOTES:

1. THIS IS A DIAGRAMMATIC REPRESENTATION ONLY. SEE GROUNDING PLAN FOR SITE-SPECIFIC GROUNDING LAYOUT AND COMPONENTS.
2. SEE GROUND NOTES FOR ADDITIONAL INFORMATION
3. USE #2/0 AWG, BCW FOR GROUND LEADS FROM BUS BARS TO GROUND RING.
4. USE #2 AWG.BCW FOR BURIED GROUND LOOP AND GROUND LEADS.
5. THE NUMBER AND SIZE OF GROUND BARS USED MAY PER SITE CONDITIONS.

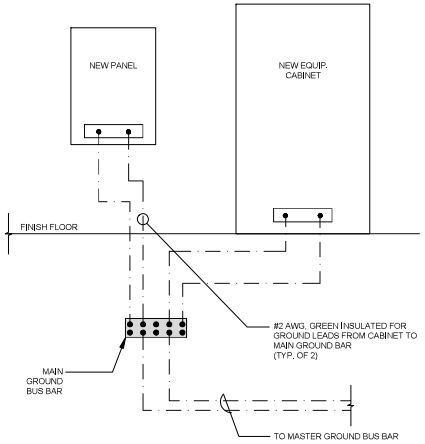


## EQUIPMENT GROUNDING

| SCALE | |
|---|---|
| NONE | 1 |

APPLICANT:

The new at&t

1452 EDINGER AVENUE,
3RD FLOOR
TUSTIN, CA 92780

ENGINEER:

Eukon
an SFC Communications, Inc. Company
65 POST, SUITE 1000
IRVINE, CA 92618
TEL: (949) 553-8566
www.eukongroup.com

THIS PAGE CONTAINS CONFIDENTIAL, PROPRIETARY OR TRADE SECRET INFORMATION EXEMPT FROM DISCLOSURE UNDER APPLICABLE LAW.

| | |
|---|---|
| DRAWN BY: | MG |
| CHECKED BY: | RB |

REVISIONS:

| REV | DATE | DESCRIPTION |
|---|---|---|
| 3 | 06/07/24 | PLAN CHECK |
| 2 | 03/26/24 | PLAN CHECK |
| 1 | 12/20/23 | PLAN CHECK |
| 0 | 03/27/23 | 100% CONSTRUCTION DRAWING |
| B | 03/09/23 | JURISDICTION COMMENTS |
| A | 01/12/23 | 90% CONSTRUCTION DRAWING |

LICENSEE:

06/07/24

PROJECT INFORMATION:

CLL05599

1880 LOMA VISTA DR.,
GLENDALE, CA 91208

SHEET TITLE:

GROUNDING DETAILS

SHEET NUMBER:

E-5

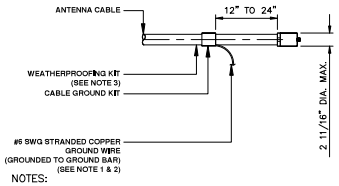


NOTES:

1. DO NOT INSTALL CABLE GROUND KIT AT A BEND AND ALWAYS DIRECT GROUND WIRE DOWN TO GROUND BAR.
2. GROUNDING KIT SHALL BE TYPE AND PART NUMBER AS SUPPLIED OR RECOMMENDED BY CABLE MANUFACTURER.
3. WEATHER PROOFING SHALL BE (TYPE AND PART NUMBER AS SUPPLIED OR RECOMMENDED BY CABLE MANUFACTURER.)

CABLE GND. KIT TO ANT. | SCALE NONE | 14

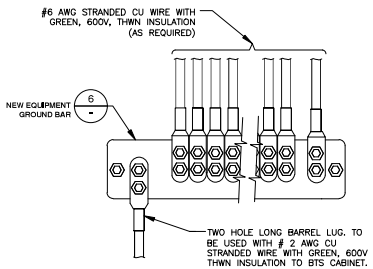


GND. WIRE TO GND. BAR | SCALE NONE | 10

NOTE:

HOLE CENTERS TO MATCH NEMA DOUBLE LUG CONFIGURATION.

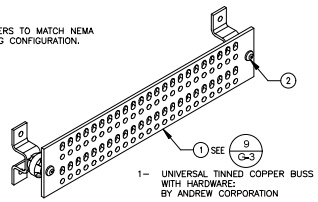


1– UNIVERSAL TINNED COPPER BUSS BAR WITH HARDWARE: BY ANDREW CORPORATION

UGBKIT–0420–T : 1/4"x4"x20" (SHOWN)
UGBKIT–0412–T : 1/4"x4"x12"
UGBKIT–0210–T : 1/4"x2"x10"
GB–HKU : MOUNTING HARDWARE KIT

2– ANDREW #MTC9674KEY TAMPER RESISTANT BUSS BAR BOLT KIT

GROUND BAR DETAIL | SCALE NONE | 6

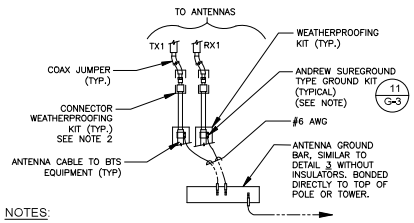


NOTES:

1. DO NOT INSTALL CABLE GROUND KIT AT A BEND AND ALWAYS DIRECT GROUND WIRE DOWN TO ANTENNA GROUND BAR.
2. WEATHER PROOFING SHALL BE ANDREW TWO–PART TAPE KIT, COLD SHRINK SHALL NOT BE USED.

GND. WIRE TO GRD. BAR | SCALE NONE | 3

NOT USED | SCALE NONE | 13

NOT USED | SCALE NONE | 9

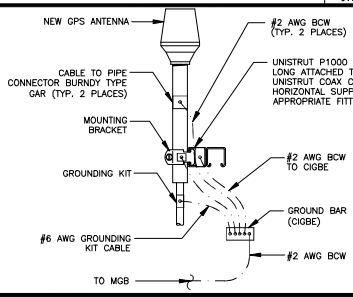


GPS ANTENNA GROUNDING | SCALE NONE | 5

NOTES

1. NUMBER OF GROUNDING BARS MAY VARY DEPENDING ON THE TYPE OF TOWER, ANTENNA LOCATION, AND CONNECTION ORIENTATION. THE SUBCONTRACTOR SHALL BE RESPONSIBLE FOR INSTALLING ADDITIONAL GROUNDING BAR AS REQUIRED, PROVIDING 50% SPARE CONNECTION POINTS.
2. DO NOT INSTALL CABLE GROUNDING KIT AT A BEND AND ALWAYS DIRECT GROUNDING CONDUCTOR DOWN TO GROUNDING BAR.
3. GROUNDING KIT SHALL BE TYPE AND PART NUMBER AS SUPPLIED OR RECOMMENDED BY CABLE MANUFACTURER.
4. WEATHER PROOFING SHALL BE TYPE AND PART NUMBER AS SUPPLIED OR RECOMMENDED BY CABLE MANUFACTURER.
5. PROVIDE GROUNDING KIT 6' BEFORE TURN TRANSITION FROM TOWER TO ICE BRIDGE.
6. WHEN THE SCOPE OF WORK REQUIRES THE ADDITION OF A GROUNDING BAR TO AN EXISTING TOWER, THE SUBCONTRACTOR SHALL OBTAIN APPROVAL FROM THE TOWER OWNER PRIOR TO MOUNTING THE GROUNDING BARS TO THE TOWER.
7. EXTEND TWO (2) #2 AWG TINNED CU CONDUCTOR FROM BURIED GROUNDING RING AND CONNECT TO THE PROPOSED TOWER, FOLLOW MANUFACTURERS RECOMMENDATIONS FOR GROUNDING CONNECTIONS TO THE TOWER. (APPLICABLE TO NEW TOWERS ONLY.)
8. BUILDINGS AND/OR NEW TOWERS GREATER THAN 75 FEET IN HEIGHT AND THE MAIN GROUNDING CONDUCTORS ARE REQUIRED TO BE ROUTED TO GRADE, THE CONTRACTOR SHALL ROUTE TWO GROUNDING CONDUCTORS FROM THE ROOF–TOP, TOWERS, AND WATER TOWERS GROUNDING RING, TO THE EXISTING GROUNDING SYSTEM, THE GROUNDING CONDUCTORS SHALL NOT BE SMALLER THAN 2/0 AWG COPPER, ROOF–TOP GROUNDING RING SHALL BE BONDED TO THE EXISTING GROUNDING SYSTEM, THE BUILDING STEEL COLUMNS, LIGHTNING PROTECTION SYSTEM, AND BUILDING MAIN WATER LINE (FERROUS OR NONFERROUS METAL PIPING ONLY), SEE AT&T GROUNDING AND BONDING STANDARDS TP–76416 SPECIFICATION 6.5.2.2.
9. FLEX CONDUIT TO BE INSTALLED ON PROPOSED COPPER CONDUCTOR UP TO GROUNDING BAR AND, SEALED AT ENDS TO PROTECT FROM OUTSIDE MOISTURE AND DEBRIS.

GROUNDING NOTES | SCALE NONE | 2

NOT USED | SCALE NONE | 12

NOT USED | SCALE NONE | 8

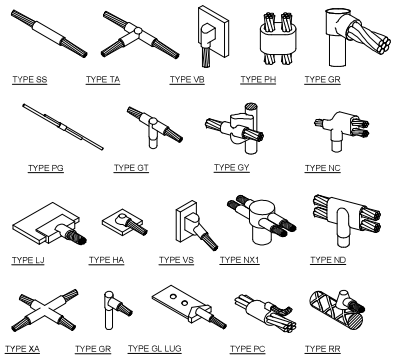


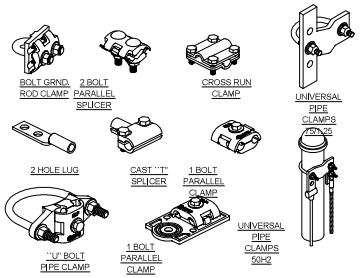


MECHANICAL CONNECTION | SCALE NONE | 1

NOT USED | SCALE NONE | 11

NOT USED | SCALE NONE | 7

EXOTHERMIC WELD | SCALE NONE | 4

APPLICANT:

The new at&t

1452 EDINGER AVENUE,
3RD FLOOR
TUSTIN, CA 92780

ENGINEER:

Eukon
an SFC Communications, Inc. Company
65 POST, SUITE 1000
IRVINE, CA 92618
TEL: (949) 553-8566
www.eukongroup.com



| | |
|---|---|
| DRAWN BY: | MG |
| CHECKED BY: | RB |

REVISIONS:

| REV | DATE | DESCRIPTION |
|---|---|---|
| | | |
| | | |
| | | |
| | | |
| | | |
| 3 | 06/07/24 | PLAN CHECK |
| 2 | 03/26/24 | PLAN CHECK |
| 1 | 12/20/23 | PLAN CHECK |
| 0 | 03/27/23 | 100% CONSTRUCTION DRAWING |
| B | 03/09/23 | JURISDICTION COMMENTS |
| A | 01/12/23 | 90% CONSTRUCTION DRAWING |

LICENSEE:


06/07/24

PROJECT INFORMATION:

CLL05599

1880 LOMA VISTA DR.,
GLENDALE, CA 91208

SHEET TITLE:

GROUNDING DETAILS

SHEET NUMBER:

E-6

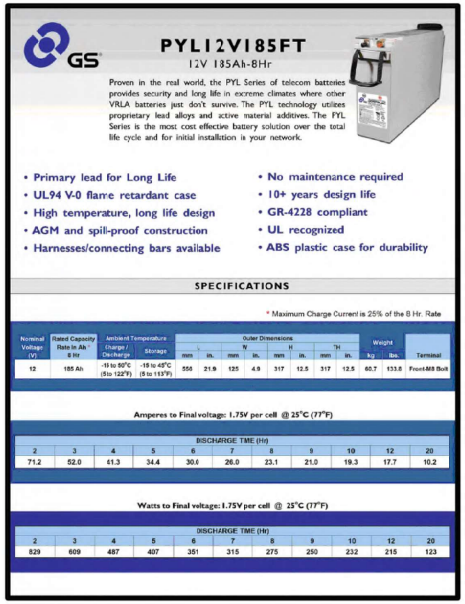

GS

# PYL12V185FT

12V 185Ah-8Hr

Proven in the real world, the PYL Series of telecom batteries provides security and long life in extreme climates where other VRLA batteries just don't survive. The PYL technology utilizes proprietary lead alloys and active material additives. The PYL Series is the most cost effective battery solution over the total life cycle and for initial installation is your network.

- Primary lead for Long Life
- UL94 V-0 flame retardant case
- High temperature, long life design
- AGM and spill-proof construction
- Harnesses/connecting bars available
- No maintenance required
- 10+ years design life
- GR-4228 compliant
- UL recognized
- ABS plastic case for durability

## SPECIFICATIONS

* Maximum Charge Current is 25% of the 8 Hr. Rate

| Nominal Voltage (V) | Rated Capacity Rate in Ah * 8 Hr | Ambient Temperature Charge / Discharge | Ambient Temperature Storage | Outer Dimensions L mm | L in. | W mm | W in. | H mm | H in. | *H mm | *H in. | Weight kg | Weight lbs. | Terminal |
|---|---|---|---|---|---|---|---|---|---|---|---|---|---|---|
| 12 | 185 Ah | -15 to 50°C (5 to 122°F) | -15 to 45°C (5 to 113°F) | 556 | 21.9 | 125 | 4.9 | 317 | 12.5 | 317 | 12.5 | 60.7 | 133.8 | Front-M8 Bolt |

Amperes to Final voltage: 1.75V per cell @ 25°C (77°F)

| DISCHARGE TIME (Hr) 2 | 3 | 4 | 5 | 6 | 7 | 8 | 9 | 10 | 12 | 20 |
|---|---|---|---|---|---|---|---|---|---|---|
| 71.2 | 52.0 | 41.3 | 34.4 | 30.6 | 26.0 | 23.1 | 21.0 | 19.3 | 17.7 | 10.2 |

Watts to Final voltage: 1.75V per cell @ 25°C (77°F)

| DISCHARGE TIME (Hr) 2 | 3 | 4 | 5 | 6 | 7 | 8 | 9 | 10 | 12 | 20 |
|---|---|---|---|---|---|---|---|---|---|---|
| 629 | 609 | 487 | 407 | 351 | 315 | 275 | 250 | 232 | 215 | 123 |

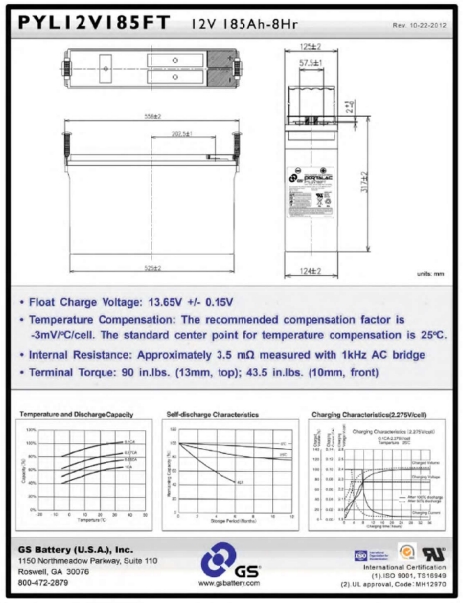

# PYL12V185FT 12V 185Ah-8Hr

Rev. 10-22-2012

units: mm

- Float Charge Voltage: 13.65V +/- 0.15V
- Temperature Compensation: The recommended compensation factor is -3mV/°C/cell. The standard center point for temperature compensation is 25°C.
- Internal Resistance: Approximately 3.5 mΩ measured with 1kHz AC bridge
- Terminal Torque: 90 in.lbs. (13mm, top); 43.5 in.lbs. (10mm, front)

Temperature and DischargeCapacity | Self-discharge Characteristics | Charging Characteristics(2.275V/cell)

GS Battery (U.S.A.), Inc.
1150 Northmeadow Parkway, Suite 110
Roswell, GA 30076
800-472-2879

www.gsbattery.com

International Certification
(1) ISO 9001, TS16949
(2) UL approval, Code: MH12970

## FIRE DEPARTMENT NOTES

GENERAL

1.0 ADDRESS NUMBERS:

A. APPROVED ADDRESS NUMBERS, BUILDING NUMBERS OR APPROVED BUILDING IDENTIFICATION SHALL BE PLACED IN A POSITION THAT PLAINLY LEGIBLE AND VISIBLE FROM THE STREET, ROAD, ALLEY, AND WALKWAYS GIVING ACCESS TO AND WITHIN THE PROPERTY.

2.0 FIRE EXTINGUISHERS:

A. PROVIDE A FIRE EXTINGUISHER (MINIMUM 2A-10BC) WITHIN A RECESSED OR SEMI-RECESSED CABINET WITHIN 75 FEET TRAVEL DISTANCE FROM ALL POINTS IN THE OCCUPANCY; THE EXTINGUISHER SHALL BE MOUNTED ON A HOOK WITHIN THE CABINET (ELEVATED OFF CABINET FLOOR); THE TOP OF THE EXTINGUISHER SHALL BE NO HIGHER THAN 48 INCHES (1219 mm) ABOVE THE FLOOR; EXTINGUISHER SHALL BE PLACED IN A EASILY ACCESSIBLE LOCATIONS WHERE THEY WILL BE READILY ACCESSIBLE AND IMMEDIATELY AVAILABLE FOR USE.

3.0 DOOR OPERATIONS:

A. ALL EXIT DOORS SHALL BE OPENABLE FROM THE INSIDE WITHOUT KEY, SPECIAL KNOWLEDGE, OR EFFORT. THE UNLATCHING OF ANY EXIT DOOR SHALL NOT REQUIRE MORE THAN ONE OPERATION.

4.0 ADDITIONAL PERMIT:

A. PRIOR TO THE FINAL INSPECTION, OBTAIN A HAZARDOUS MATERIALS PERMIT FROM THE FIRE DEPARTMENT. CONTACT THE ENVIROMENTAL MANAGEMENT CENTER AT (916) 455-8200

5.0 REQUIRED INSPECTIONS:

A. THE FIRE DEPARTMENT INSPECTION FOR THIS PROJECT INCLUDE THE FOLLOWING:

1. HAZARDOUS MATERIALS FINAL INSPECTION.
2. FIRE PREVENTION BUREAU FINAL INSPECTION – CONTRACTOR MUST REQUEST A SEPERATE INSPECTION. INSPECTION.INCLUDES, BUT IS NOT LIMITED TO: FIRE EXTINGUISHERS; SIGNAGE; DOOR HARDWARE AND MEANS OF EGRESS; EMERGENCY/EXIT LIGHTING; ETC.

NOTE: TO SCHEDULE INSPECTIONS: CALL OFFICE OF STATE FIRE MARSHALL AT (916-445-8200) AT LEAST 48 HOURS IN ADVANCE.

## NOTES

1. PER CFC 2019 SECTION 1206.2 "STATIONARY STORAGE BATTERY SYSTEMS HAVING CAPACITIES EXCEEDING THE VALUES SHOWN IN TABLE 1206.2 SHALL COMPLY WITH SECTION 1206.2.1 THROUGH 1206.2.12.6, AS APPLICABLE". SINCE THE TOTAL CAPACITY OF THE LEAD-ACID-TYPE BATTERY SYSTEM IS LESS THAN 70kWh THIS MODIFICATION IS EXEMPT FROM CFC 2019 SECTION 1206. CAPACITY CALCULATION:

   (16 BATTERIES x 185Ah x 12V) / 1000 = 35.52kWh)

2. DEFINITIONS PER CFC 2019 SECTION 1202.1:

   LEAD ACID BATTERY:
   A STORAGE BATTERY THAT IS COMPRISED OF LEAD ELECTRODES IMMERSED IN SULPHURIC ACID ELECTROLYTE.

   CORROSIVE:
   A CHEMICAL THAT CAUSES VISIBLE DESTRUCTION OF, OR IRREVERSIBLE ALTERATIONS IN, LIVING TISSUE BY CHEMICAL ACTION AT THE POINT OF CONTACT. A CHEMICAL SHALL BE CONSIDERED CORROSIVE IF, WHEN TESTED ON THE INTACT SKIN OF ALBINO RABBITS BY THE METHOD DESCRIBED IN DOTN 49 CFR 173.137, SUCH CHEMICAL DESTROYS OR CHANGES IRREVERSIBLY THE STRUCTURE OF THE TISSUE AT THE POINT OF CONTACT FOLLOWING AN EXPOSURE PERIOD OF 4 HOURS. THIS TERM DOES NOT REFER TO ACTION ON INANIMATE SURFACES.

   HAZARDOUS MATERIALS:
   THOSE CHEMICALS OR SUBSTANCES WHICH ARE PHYSICAL HAZARDS OR HEALTH HAZARDS AS DEFINED AND CLASSIFIED IN THIS CHAPTER, WHETHER THE MATERIALS ARE IN USABLE OR WASTE CONDITION.

   HEALTH HAZARD:
   A CLASSIFICATION OF A CHEMICAL FOR WHICH THERE IS STATISTICALLY SIGNIFICANT EVIDENCE THAT ACUTE OR CHRONIC HEALTH EFFECTS ARE CAPABLE OF OCCURRING IN EXPOSED PERSONS. THE TERM 'HEALTH HAZARD' INCLUDES CHEMICALS THAT ARE TOXIC, HIGHLY TOXIC AND CORROSIVE.

   PHYSICAL HAZARD:
   A CHEMICAL FOR WHICH THERE IS EVIDENCE THAT IT IS A COMBUSTIBLE LIQUID, CRYOGENIC FLUID, EXPLOSIVE, FLAMMABLE (SOLID, LIQUID OR GAS), ORGANIC PEROXIDE (SOLID OR LIQUID), OXIDIZER (SOLID OR LIQUID), OXIDIZING GAS, PYROPHORIC (SOLID, LIQUID OR GAS), UNSTABLE (REACTIVE) MATERIAL (SOLID, LIQUID OR GAS) OR WATER-REACTIVE MATERIAL (SOLID OR LIQUID).

| BATTERY TYPE | ELECTROLYTE WEIGHT (lbs.) | ELECTROLYTE VOLUME (gal.) | ACID WEIGHT (lbs.) | ACID VOLUME (gal.) | LEAD (lbs.) | LEAD OXIDE (lbs.) | TOTAL # OF BATTERIES | ELECTROLYTE TOTAL WEIGHT (lbs.) | ELECTROLYTE TOTAL VOLUME (gal.) | TOTAL ACID (gal.) |
|---|---|---|---|---|---|---|---|---|---|---|
| * MARATHON "M12V180FT" | 27.27 | 2.47 | 11.44 | 0.74 | 92.6 | 20 | 8 | 218.16 | 19.76 | 5.92 |

APPLICANT:

The new at&t

1452 EDINGER AVENUE,
3RD FLOOR
TUSTIN, CA 92780

ENGINEER:

Eukon
an SFC Communications, Inc. Company
65 POST, SUITE 1000
IRVINE, CA 92618
TEL: (949) 553-8566
www.eukongroup.com



| | |
|---|---|
| DRAWN BY: | MG |
| CHECKED BY: | RB |

REVISIONS:

| REV | DATE | DESCRIPTION |
|---|---|---|
| | | |
| | | |
| | | |
| | | |
| | | |
| 3 | 06/07/24 | PLAN CHECK |
| 2 | 03/26/24 | PLAN CHECK |
| 1 | 12/20/23 | PLAN CHECK |
| 0 | 03/27/23 | 100% CONSTRUCTION DRAWING |
| B | 03/09/23 | JURISDICTION COMMENTS |
| A | 01/12/23 | 90% CONSTRUCTION DRAWING |

LICENSEE:

REGISTERED PROFESSIONAL ENGINEER CHRIS A. LEE 78549 CIVIL STATE OF CALIFORNIA

06/07/24

PROJECT INFORMATION:

CLL05599

1880 LOMA VISTA DR.,
GLENDALE, CA 91208

SHEET TITLE:

FIRE DEPARTMENT NOTES AND BATTERY INFORMATION

SHEET NUMBER:

FD-1

## GENERAL CONSTRUCTION NOTES:

1. WHERE CONFLICTS OCCUR BETWEEN PLANS, SPECIFICATIONS, JURISDICTIONAL AGENCY REQUIREMENTS, OR OTHER CONTRACT DOCUMENTS, THE MOST STRINGENT SHALL GOVERN.
2. ISSUANCE OF A BUILDING PERMIT BY THE JURISDICTION DOES NOT RELIEVE APPLICANTS OF THE LEGAL REQUIREMENTS TO OBSERVE COVENANTS, CONDITIONS AND RESTRICTIONS WHICH MAY BE RECORDED AGAINST THE PROPERTY OR TO OBTAIN PLANS. YOU SHOULD CONTACT YOUR COMMUNITY ASSOCIATIONS PRIOR TO COMMENCEMENT OF ANY CONSTRUCTION AUTHORIZED BY THIS PERMIT.
3. PRIOR TO PERFORMING ANY WORK IN THE CITY RIGHT-OF-WAY AN ENCROACHMENT PERMIT MUST BE OBTAINED FROM THE PUBLIC WORKS DEPARTMENT.
4. ALL WORK SHALL CONFORM TO CITY OF GLENDALE MUNICIPAL CODE, THE PROJECT SOILS REPORT AND SPECIAL REQUIREMENTS OF THE PERMIT.
5. DUST SHALL BE CONTROLLED BY WATERING AND/OR DUST PALLIATIVE.
6. SANITARY FACILITIES SHALL BE MAINTAINED ON THE SITE DURING THE CONSTRUCTION PERIOD.
7. WORK HOURS ARE LIMITED FROM 7:00 AM TO 6:30 PM MONDAY THROUGH FRIDAY; 8:00 AM TO 6:00 PM SATURDAYS; AND NO WORK ON SUNDAYS AND HOLIDAYS.
8. NOISE, EXCAVATION, DELIVERY AND REMOVAL SHALL BE CONTROLLED.
9. THE STAMPED SET OF APPROVED PLANS SHALL BE ON THE JOB SITE AT ALL TIMES.
10. PERMITTEE AND CONTRACTOR ARE RESPONSIBLE FOR LOCATING AND PROTECTING UTILITIES.
11. APPROVED SHORING, DRAINAGE PROVISIONS AND PROTECTIVE MEASURES MUST BE USED TO PROTECT ADJOINING PROPERTIES DURING THE GRADING OPERATION.
12. CESSPOOLS AND SEPTIC TANKS, IF THEY EXIST ON SITE, SHALL BE ABANDONED IN COMPLIANCE WITH THE UNIFORM PLUMBING CODE AND APPROVED BY THE BUILDING OFFICIAL.
13. HAUL ROUTES FOR IMPORT OR EXPORT OF MATERIALS SHALL BE APPROVED BY THE COUNTY AND PROCEDURES SHALL CONFORM WITH CITY AND COUNTY CODE.
14. POSITIVE DRAINAGE SHALL BE MAINTAINED AWAY FROM ALL BUILDING AND SLOPE AREAS.
15. FAILURE TO REQUEST INSPECTIONS AND/OR HAVE REMOVABLE EROSION CONTROL DEVICES ON-SITE AT THE APPROPRIATE TIMES SHALL RESULT IN A "STOP WORK" ORDER.
16. ALL PLASTIC DRAINAGE PIPES SHALL CONSIST OF PVC OR ABS PLASTIC SCHEDULE 40 OR SDR 35 OR ADS 3000 WITH GLUED JOINTS.
17. NO PAINT, PLASTER, CEMENT, SOIL, MORTAR OR OTHER RESIDUE SHALL BE ALLOWED TO ENTER STREETS, CURBS, GUTTERS OR STORM DRAINS. ALL MATERIAL AND WASTE SHALL BE REMOVED FROM THE SITE.
18. A PRE-GRADING MEETING SHALL BE SCHEDULED 48 HOURS PRIOR TO START OF GRADING WITH THE FOLLOWING PEOPLE PRESENT: OWNER, GRADING CONTRACTOR, DESIGN CIVIL ENGINEER, SOILS ENGINEER, GEOLOGIST, CITY BUILDING INSPECTOR OR THEIR REPRESENTATIVES. REQUIRED FIELD INSPECTIONS WILL BE OUTLINED AT THE MEETING.
19. A PRE-PAVING MEETING SHALL BE SCHEDULED 48 HOURS PRIOR TO START OF THE SUB-GRADE PREPARATION FOR THE PAVING WITH THE FOLLOWING PEOPLE PRESENT: OWNER, PAVING CONTRACTORS, DESIGN CIVIL ENGINEER, SOILS ENGINEER, CITY BUILDING INSPECTOR OR THEIR REPRESENTATIVES. REQUIRED FIELD INSPECTIONS WILL BE OUTLINED AT THE MEETING.
20. FOR SITE PREPARATION, SUITABLE FILL MATERIAL, GRADING AND EARTHWORK ACTIVITIES, FOUNDATION SETBACKS AND OTHER GEOTECHNICAL RECOMMENDATIONS, REFER TO GEOTECHNICAL INVESTIGATION REPORT PREPARED BY GEOBODEN INC., DATED DECEMBER 26, 2022, PROJECT NO. CLL05599-1-01.

| ESTIMATED EARTHWORK SUMMARY (CY) | | | | |
|---|---|---|---|---|
| | CUT | FILL | NET (CUT-FILL) | |
| RAW SURFACE GRADING | 76.16 | 0.21 | 75.95 | |
| SECTION ADJUSTMENTS | | | | |
| LEASE AREA (6" AB) | | -17.33 | 17.33 | |
| GRAVEL LEASE AREA (3" of 3/4" ROCK) | | -5.56 | 5.56 | |
| | | 0.00 | 0.00 | |
| TOTAL | 76.16 | -22.68 | 98.84 | CUT(EXPORT) |

DISTURBED AREA= 0.020 ACRES
MAX CUT DEPTH= 8.911 FT
MAX FILL HEIGHT= 1.067 FT

21. ENGINEERS ESTIMATE OF EARTHWORK VOLUMES IS BASED ON TOPOGRAPHICAL INFORMATION PROVIDED BY OTHERS AND DOES NOT INCLUDE TRENCH SPOILS FOR UTILITY TRENCHING, SHRINK/SWELL FACTORS, OR EXCAVATION VOLUMES FOR RETAINING WALLS, TOWERS, CONCRETE PADS OR OTHER STRUCTURAL SECTIONS. IT SHALL BE THE RESPONSIBILITY OF THE CONTRACTOR TO VERIFY ALL EARTHWORK QUANTITIES PRIOR TO BID.

## PRIVATE ENGINEER'S NOTICE TO CONTRACTOR

THE EXISTENCE AND LOCATION OF ANY UNDERGROUND UTILITY PIPES, CONDUITS OR STRUCTURES SHOWN ON THESE PLANS WAS OBTAINED BY A SEARCH OF THE AVAILABLE RECORDS AND INFORMATION PROVIDED BY EUKON GROUP AND OTHERS. TO THE BEST OF OUR KNOWLEDGE, THERE ARE NO EXISTING UTILITIES EXCEPT AS SHOWN ON THESE PLANS. THE CONTRACTOR IS REQUIRED TO TAKE DUE PRECAUTIONARY MEASURES TO PROTECT THE UTILITY LINES SHOWN ON THESE DRAWINGS. THE CONTRACTOR FURTHER ASSUMES ALL LIABILITY AND RESPONSIBILITY FOR THE UTILITY PIPES, CONDUITS OR STRUCTURES SHOWN OR NOT SHOWN ON THESE DRAWINGS. THE CONTRACTOR SHALL POTHOLE ALL EXISTING UTILITIES TO VERIFY THE LOCATION AND ANY DISCREPANCY BETWEEN THE PLANS SHALL BE BROUGHT TO THE ATTENTION OF THE DESIGN ENGINEER.

CONTRACTOR AGREES THAT HE SHALL ASSUME SOLE AND COMPLETE RESPONSIBILITY FOR THE JOB SITE CONDITION DURING THE COURSE OF CONSTRUCTION OF THIS PROJECT, INCLUDING SAFETY OF ALL PERSONS AND PROPERTY AND THAT THIS REQUIREMENT SHALL APPLY CONTINUOUSLY AND NOT BE LIMITED TO NORMAL WORKING HOURS.

## CITY OF GLENDALE GENERAL GRADING NOTES:

1. ALL GRADING SHALL CONFORM TO THE 2016 CALIFORNIA BUILDING CODE (CBC) CHAPTERS 17, 18, & APPENDIX-J AS AMENDED BY ORDINANCE 457.
2. ALL PROPERTY CORNERS, GRADING BOUNDARIES AND ALL CONSERVATION AREAS/LEAST SENSITIVE AREA (LSA) DETERMINED BY THE ENVIRONMENTAL PROGRAMS DEPARTMENT (EPD) SHALL BE CLEARLY DELINEATED AND STAKED IN THE FIELD PRIOR TO COMMENCEMENT OF ANY CONSTRUCTION/GRADING.
3. ALL WORK UNDER THIS PERMIT SHALL BE LIMITED TO WORK WITHIN THE PROPERTY LINES. ALL WORK WITHIN THE ROAD RIGHT-OF-WAY WILL REQUIRE SEPARATE PLANS AND A SEPARATE REVIEW-APPROVAL (PERMIT) FROM THE TRANSPORTATION DEPARTMENT.
4. ALL GRADING SHALL BE DONE UNDER THE SUPERVISION OF A SOILS ENGINEER IN CONFORMANCE WITH THE RECOMMENDATIONS OF THE PRELIMINARY SOILS INVESTIGATION PREPARED BY GEOBODEN INC., DATED DECEMBER 26, 2022, PROJECT NO. CLL05599-1-01.
5. COMPACTED FILL TO SUPPORT ANY STRUCTURES SHALL COMPLY WITH THE PROJECT GEOTECHNICAL INVESTIGATION REPORT. PROJECTS WITHOUT A PRELIMINARY SOILS REPORT SHALL INCLUDE DETAILED SPECIFICATIONS IN ACCORDANCE WITH SECTIONS 1803.2 AND 1803.5 PREPARED BY THE ENGINEER OF RECORD.
6. THE CONTRACTOR SHALL NOTIFY THE BUILDING AND SAFETY DEPARTMENT AT LEAST 24 HOURS IN ADVANCE TO REQUEST FINISH LOT GRADE AND DRAINAGE INSPECTION. THIS INSPECTION MUST BE APPROVED PRIOR TO BUILDING PERMIT FINAL INSPECTION FOR EACH LOT.
7. THE CONTRACTOR SHALL NOTIFY UNDERGROUND SERVICE ALERT, TWO DAYS BEFORE DIGGING AT 1-800-422-4133.
8. PRIOR TO GRADING, A MEETING SHALL BE SCHEDULED WITH A CITY OF GLENDALE COMPLIANCE INSPECTOR PRIOR TO COMMENCEMENT OF GRADING OPERATIONS.

### CUT/FILL

9. MAXIMUM CUT AND FILL SLOPE = 2:1 (HORIZONTAL TO VERTICAL).
10. NO FILL SHALL BE PLACED ON EXISTING GROUND UNTIL THE GROUND HAS BEEN CLEARED OF WEEDS, TOPSOIL AND OTHER DELETERIOUS MATERIAL. FILLS SHOULD BE PLACED IN THIN LIFTS (8-INCH MAX OR AS RECOMMENCED IN THE SOILS REPORT), COMPACTED AND TESTED THROUGHOUT THE GRADING PROCESS UNTIL FINAL GRADES ARE ATTAINED. ALL FILLS ON SLOPES STEEPER THAN 5 TO 1 (HORIZONTAL TO VERTICAL) AND A HEIGHT GREATER THAN 5 FEET SHALL BE KEYED AND BENCHED INTO FIRM NATURAL SOIL FOR FULL SUPPORT. THE BENCH UNDER THE TOE MUST BE 10 FEET WIDE MINIMUM.
11. THE SLOPE STABILITY FOR CUT AND FILL SLOPES OVER 30 FEET IN VERTICAL HEIGHT, OR CUT SLOPES STEEPER THAN 2:1 HAVE BEEN VERIFIED WITH A FACTOR OF SAFETY OF AT LEAST 1.5.
12. NO ROCK OR SIMILAR IRREDUCIBLE MATERIAL WITH A MAXIMUM DIMENSION GREATER THAN 12 INCHES SHALL BE BURIED OR PLACED IN FILLS CLOSER THAN 10 FEET TO THE FINISHED GRADE.

### DRAINAGE, EROSION / DUST CONTROL

13. DRAINAGE ACROSS PROPERTY LINES SHALL NOT EXCEED THAT WHICH EXISTED PRIOR TO GRADING. EXCESS OR CONCENTRATED DRAINAGE SHALL BE CONTAINED ON SITE OR DIRECTED TO AN APPROVED DRAINAGE FACILITY. EROSION OF THE GROUND IN THE AREA OF DISCHARGE SHALL BE PREVENTED BY INSTALLATION OF NON-EROSIVE DOWN DRAINS OR OTHER DEVICES.
14. PROVIDE A PAVED SLOPE INTERCEPTOR DRAIN ALONG THE TOP OF CUT SLOPES WHERE THE DRAINAGE PATH IS GREATER THAN 40 FEET TOWARDS THE CUT SLOPE.
15. PROVIDE 5' WIDE BY 1' HIGH BERM ALONG THE TOP OF ALL FILL SLOPES STEEPER THAN 3:1 (HORIZONTAL TO VERTICAL).
16. THE GROUND SURFACE IMMEDIATELY ADJACENT TO THE BUILDING FOUNDATION SHALL BE SLOPED AWAY FROM THE BUILDING AT A SLOPE OF NOT LESS THAN ONE UNIT VERTICAL IN 20 UNITS HORIZONTAL (5-PERCENT SLOPE) FOR A MINIMUM DISTANCE OF 10 FEET MEASURED PERPENDICULAR TO THE FACE OF THE FOUNDATION.
17. NO OBSTRUCTION OF NATURAL WATER COURSES SHALL BE PERMITTED.
18. DURING ROUGH GRADING OPERATIONS AND PRIOR TO CONSTRUCTION OF PERMANENT DRAINAGE STRUCTURES, TEMPORARY DRAINAGE CONTROL (BEST MANAGEMENT PRACTICES, BMPS) SHALL BE PROVIDED TO PREVENT PONDING WATER AND DRAINAGE TO ADJACENT PROPERTIES.
19. DUST CONTROL SHALL BE CONTROLLED BY WATERING OR OTHER APPROVED METHODS.
20. FUGITIVE DUST CONTROL: CONSTRUCTION SITES SUBJECT TO PM10 FUGITIVE DUST MITIGATION SHALL COMPLY WITH AQMD RULE 403.1.
21. ALL EXISTING DRAINAGE COURSES AND STORM DRAIN FACILITIES SHALL CONTINUE TO FUNCTION. PROTECTIVE MEASURES AND TEMPORARY DRAINAGE PROVISIONS MUST BE USED TO PROTECT ADJOINING PROPERTIES DURING GRADING OPERATIONS.
22. FOR ALL SLOPES STEEPER THAN 4 TO 1 (H/V): ALL SLOPES EQUAL TO OR GREATER THAN 3' IN VERTICAL HEIGHT ARE REQUIRED TO BE PLANTED WITH AN APPROVED DROUGHT-TOLERANT GROUND COVER AT A MINIMUM SPACING OF 12" ON CENTER OR AS APPROVED BY THE ENGINEER OF RECORD OR THE REGISTERED LANDSCAPE ARCHITECT AND DROUGHT-TOLERANT SHRUBS SPACED AT NO MORE THAN 10' ON CENTER. SLOPES EXCEEDING 15' IN VERTICAL HEIGHT SHALL BE PLANTED WITH APPROVED SHRUBS NOT TO EXCEED 10' ON CENTER, OR TREES SPACED NOT TO EXCEED 20' ON CENTER, OR A COMBINATION OF SHRUBS AND TREES NOT TO EXCEED 15' IN ADDITION TO THE GRASS OR GROUND COVER. SLOPES THAT REQUIRE PLANTING SHALL BE PROVIDED WITH AN IN-GROUND IRRIGATION SYSTEM EQUIPPED WITH AN APPROPRIATE BACKFLOW DEVICE PER C.P.C. CHAPTER 6. THE SLOPE PLANTING AND IRRIGATION SYSTEM SHALL BE INSTALLED AS SOON AS POSSIBLE UPON COMPLETION OF ROUGH GRADING. ALL PERMANENT SLOPE PLANTING SHALL BE ESTABLISHED AND IN GOOD CONDITION PRIOR TO SCHEDULING PRECISE GRADE INSPECTION.

### COMPLETION OF WORK

### ROUGH GRADE

23. A REGISTERED CIVIL ENGINEER SHALL PREPARE FINAL COMPACTION REPORT/GRADING REPORT AND IT SHALL BE SUBMITTED TO THE DEPARTMENT OF BUILDING AND SAFETY FOR REVIEW AND APPROVAL. THE REPORT SHALL INCLUDE BUILDING FOUNDATION DESIGN PARAMETERS (ALLOWABLE SOIL PRESSURES, ETC.), EXPANSION INDEX (AND DESIGN ALTERNATIVES IF EI > 20), WATER SOLUBLE SULFATE CONTENT, CORROSIVITY AND REMEDIAL MEASURES IF NECESSARY.
24. EXCEPT FOR NON-TRACT SINGLE RESIDENTIAL LOT GRADING, THE COMPACTION REPORT SHALL INCLUDE THE SPECIAL INSPECTION VERIFICATIONS LISTED ON TABLE 1705.6 OF 2016 CBC.

## GENERAL EROSION CONTROL NOTES:

1. IN CASE OF EMERGENCY CALL _____
2. A STANDBY CREW FOR EMERGENCY WORK SHALL BE AVAILABLE AT ALL TIMES. NECESSARY MATERIALS SHALL BE AVAILABLE ON-SITE AND STOCKPILED AT CONVENIENT LOCATIONS TO FACILITATE RAPID CONSTRUCTION OF TEMPORARY DEVICES OR TO REPAIR ANY DAMAGED EROSION CONTROL MEASURES.
3. EROSION CONTROL DEVICES SHALL NOT BE MOVED OR MODIFIED WITHOUT THE APPROVAL OF THE CITY ENGINEER.
4. AFTER A RAINSTORM, ALL SILT AND DEBRIS SHALL BE REMOVED FROM CHECK BERMS AND DESILTING BASINS. ANY GRADED SLOPE SURFACE PROTECTION MEASURES DAMAGED DURING THE RAINSTORM SHALL ALSO BE REPAIRED IMMEDIATELY.
5. FILL SLOPES AT THE PROJECT PERIMETER MUST DRAIN AWAY FROM THE TOP OF THE SLOPE AT THE CONCLUSION OF EACH WORKING DAY.
6. A SIX-FOOT HIGH PERIMETER FENCE OR A 24-HOUR GUARD SHALL BE POSTED ON THE SITE WHENEVER THE DEPTH OF WATER IN ANY DEVICE EXCEEDS 18 INCHES.
7. TEMPORARY EROSION DEVICES SHOWN ON THE GRADING PLAN WHICH INTERFERE WITH THE WORK SHALL BE RELOCATED OR MODIFIED WHEN THE PUBLIC WORKS INSPECTOR SO DIRECTS THE WORK PROGRESS.
8. ALL LOOSE SOIL AND DEBRIS SHALL BE REMOVED FROM THE STREET AREAS UPON STARTING OPERATIONS AND PERIODICALLY THEREAFTER AS DIRECTED BY THE PUBLIC WORKS INSPECTOR.
9. WHEN THE PUBLIC WORKS INSPECTOR SO DIRECTS, A 12-INCH BERM SHALL BE MAINTAINED ALONG THE TOP OF THE SLOPE OF THOSE FILLS ON WHICH GRADING IS NOT IN PROGRESS.
10. VELOCITY CHECK DAMS SHALL BE PROVIDED ACROSS THE OUTLETS OF ALL LOTS DRAINING INTO THE STREET.
11. ALL FILLS SHALL BE GRADED TO PROMOTE DRAINAGE AWAY FROM THE EDGE OF THE FILL.
12. STAND-BY CREWS SHALL BE ALERTED BY THE PERMITTEE OR CONTRACTOR FOR EMERGENCY WORK DURING RAINSTORMS.
13. ALL UTILITY TRENCHES SHALL BE BLOCKED AT THE PRESCRIBED INTERVALS FROM BOTTOM TO TOP WITH A DOUBLE ROW OF SANDBAGS PRIOR TO BACKFILL. SEWER TRENCHES SHALL BE BLOCKED AT THE PRESCRIBED INTERVALS WITH A DOUBLE ROW OF SANDBAGS EXTENDING DOWNWARD, TWO SANDBAGS FROM THE GRADED SURFACE OF THE STREET. SANDBAGS ARE TO BE PLACED WITH ALTERNATE HEADER AND STRETCHER COURSES. THE INTERVALS PRESCRIBED BETWEEN SANDBAG BLOCKING SHALL DEPEND ON THE SLOPE OF THE GROUND SURFACE, BUT NOT EXCEED THE FOLLOWING:

| GRADE OF THE STREET | INTERVALS |
|---|---|
| LESS THAN 2% | AS REQUIRED |
| 2% TO 4% | 100 FEET |
| 4% TO 10% | 50 FEET |
| OVER 10% | 25 FEET |

14. VELOCITY CHECK DAMS SHALL BE PROVIDED IN ALL UNPAVED STREET AREAS AT THE INTERVALS INDICATED ABOVE. VELOCITY CHECK DAMS MAY BE CONSTRUCTED OF SANDBAGS, TIMBER, OR OTHER EROSION-RESISTANT MATERIALS APPROVED BY THE PUBLIC WORKS INSPECTOR, AND SHALL EXTEND COMPLETELY ACROSS THE STREET OR CHANNEL AT RIGHT ANGLES TO THE CENTERLINE. EARTH DIKES MAY NOT BE USED AS VELOCITY CHECK DAMS. PLASTIC BAGS SHALL NOT BE USED FOR SANDBAGS.
15. VELOCITY CHECK DAMS SHALL BE PROVIDED IN ALL UNPAVED GRADED CHANNELS AT THE INTERVALS INDICATED BELOW:

| GRADE OF CHANNEL | INTERVALS BETWEEN CHECK DAMS |
|---|---|
| LESS THAN 3% | 100 FEET |
| 3% TO 6% | 50 FEET |
| OVER 6% | 25 FEET |

16. AFTER SEWER AND UTILITY TRENCHES ARE BACKFILLED AND COMPACTED, THE SURFACES OVER SUCH TRENCHES SHALL BE MOUNDED SLIGHTLY TO PREVENT CHANNELING OF WATER IN THE TRENCH AREA. CARE SHOULD BE EXERCISED TO PROVIDE FOR CROSS FLOWS AT FREQUENT INTERVALS WHERE TRENCHES ARE NOT ON THE CENTERLINE OF A CROWN STREET.
17. EXCEPT WHEN THE PUBLIC WORKS INSPECTOR DIRECTS OTHERWISE, ALL DEVICES SHOWN SHALL BE IN PLACE AT THE END OF EACH WORKING DAY WHEN RAIN IS FORECAST AND SHALL BE MAINTAINED DURING THE RAINY SEASON (OCTOBER 1 THRU APRIL 15).
18. ALL BASINS AND CHECK DAMS SHALL HAVE THE DEBRIS AND SILT REMOVED AFTER EACH STORM TO RESTORE THEIR CAPACITY.
19. SANDBAG SHALL BE STOCKPILED IN PARKWAY AT INTERVALS SHOWN PLANS, READY TO BE PLACED IN POSITION WHEN RAIN IS FORECAST, OR WHEN THE PUBLIC WORKS INSPECTOR SO DIRECTS.
20. BRUSH AND GROUND COVER MAY NOT BE REMOVED MORE THAN 10-FEET ABOVE FILLS BETWEEN OCTOBER 15 AND APRIL 15.
21. PLACEMENT OF DEVICES TO REDUCE EROSION DAMAGE WITHIN THE PROJECT MUST BE SHOWN ON THE PLAN. STOCKPILE LOCATIONS FOR MATERIALS SHALL ALSO BE INDICATED ON THE DRAWING.
22. A CONSTRUCTION ENTRANCE SHALL BE INSTALLED PRIOR TO COMMENCEMENT OF GRADING. LOCATION OF THE ENTRANCE MAY BE ADJUSTED BY THE CONTRACTOR TO FACILITATE GRADING OPERATIONS. ALL CONSTRUCTION TRAFFIC ENTERING THE PAVED ROAD MUST CROSS THE CONSTRUCTION ENTRANCE. THE CONSTRUCTION ENTRANCE SHALL CONSIST OF A BED OF 3/4" GRAVEL OF THE FOLLOWING MINIMUM DIMENSIONS: 15' WIDE, 30' LONG AND 12" DEEP. THE CONSTRUCTION ENTRANCE SHALL BE REMOVED PRIOR TO PLACING BASE FOR PAVING.
23. ALL SANDBAGS SHALL BE AMERICAN BUILDERS SUPPLY SIZE 18"X 30" MADE OF PROPYLENE MATERIAL OR EQUAL, WITH 10X12 WEAVE, 950 DENIER, 1200-HOUR U.V. RATING, OF MILK WHITE COLOR, AND SHOULD HAVE 1000 PER BALE.
25. SEDIMENTS AND OTHER POLLUTANTS MUST BE RETAINED ON SITE AND MAY NOT BE TRANSPORTED FROM THE SITE VIA SHEET FLOW, SWALES, AREA DRAINS, NATURAL DRAINAGE COURSES OR WIND.
26. STOCKPILES OF EARTH AND OTHER CONSTRUCTION RELATED MATERIALS MUST BE PROTECTED FROM BEING TRANSPORTED FROM THE SITE BY THE FORCES OF WIND OR WATER.
27. FUELS, OILS, SOLVENTS AND OTHER TOXIC MATERIALS MUST BE STORED IN ACCORDANCE WITH THEIR LISTING AND ARE NOT TO CONTAMINATE THE SOIL AND SURFACE WATERS. ALL APPROVED STORAGE CONTAINERS ARE TO BE PROTECTED FROM THE WEATHER. SPILLS MUST BE CLEANED UP IMMEDIATELY AND DISPOSED OF IN A PROPER MANNER. SPILLS MAY NOT BE WASHED INTO THE DRAINAGE SYSTEM.
28. NON-STORM WATER RUNOFF FROM EQUIPMENT AND VEHICLE WASHING AND ANY OTHER ACTIVITY SHALL BE CONTAINED AT THE PROJECT SITE.
29. EXCESS OR WASTE CONCRETE MAY NOT BE WASHED INTO THE PUBLIC WAY OR ANY OTHER DRAINAGE SYSTEM. PROVISIONS SHALL BE MADE TO RETAIN CONCRETE WASTES ON SITE UNTIL THEY CAN BE DISPOSED OF AS SOLID WASTE.
30. TRASH AND CONSTRUCTION RELATED SOLID WASTES MUST BE DEPOSITED INTO A COVERED RECEPTACLE TO PREVENT CONTAMINATION OF RAINWATER AND DISPERSAL BY WIND.
31. SEDIMENTS AND OTHER MATERIALS MAY NOT BE TRACKED FROM THE SITE BY VEHICLE TRAFFIC. THE CONSTRUCTION ENTRANCE ROADWAYS MUST BE STABILIZED SO TO INHIBIT SEDIMENTS FROM BEING DEPOSITED INTO THE PUBLIC WAY. ACCIDENTAL DEPOSITIONS MUST BE SWEPT UP IMMEDIATELY AND MAY NOT BE WASHED DOWN BY RAIN OR OTHER MEANS.
32. ANY SLOPES WITH DISTURBED SOILS OR DENUDED OF VEGETATION MUST BE STABILIZED SO AS TO INHIBIT EROSION BY WIND AND WATER.

PROJECT:
CLL05599
1765 HILLFAIR DR.
GLENDALE, CA 91208

PREPARED FOR:
The new at&t
1452 EDINGER AVENUE,
3RD FLOOR
TUSTIN, CA 92780

VENDOR:
Eukon
an SFC Communications, Inc. Company
65 POST, SUITE 1000
IRVINE, CA 92815
TEL: (949) 553-8566
www.eukongroup.com

| | |
|---|---|
| SITE NO: | CLL05599 |
| JDC PROJ NO: | 22005005 |
| DRAWN BY: | JDC |
| CHECKED BY: | JDC |

| REV | DATE | DESCRIPTION |
|---|---|---|
| | | |

ENGINEER OF RECORD:
REGISTERED PROFESSIONAL ENGINEER
JOSEPH CHRISTIANSEN
No. C89629
Civil
STATE OF CALIFORNIA
DATE: 12/27/2022



ENGINEERING FIRM:
JD DESIGN
& CONSULTING ENGINEERS
15016 Lago Drive, Rancho Murieta, CA 95683

SHEET TITLE:
CIVIL GENERAL NOTES

SHEET NUMBER:
C1.0

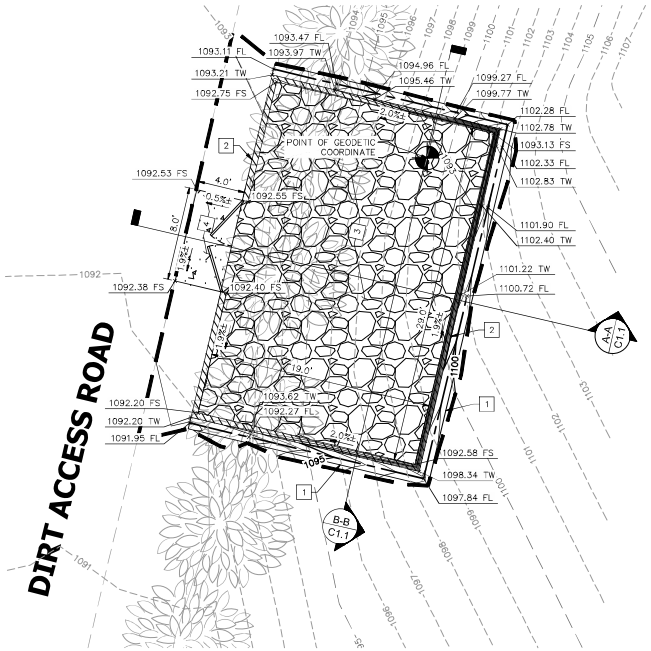


## LEGEND:

- EXIST PROPERTY LINE
- CIVIL LIMIT OF WORK
- GEODETIC COORDINATE POINT

## SITE PLAN KEYNOTES:

1. PROPOSED CONCRETE CHANNEL PER ARCH DETAILS.
2. PROPOSED CMU SCREENING WALL AND RETAINING WALL.
3. PROPOSED GRAVEL PER ARCH DETAILS.
4. PROPOSED CONC. PAD PER ARCH DETAILS.

NOTES:

1. ISSUANCE OF A BUILDING PERMIT BY THE JURISDICTION DOES NOT RELIEVE APPLICANTS OF THE LEGAL REQUIREMENTS TO OBSERVE COVENANTS, CONDITIONS AND RESTRICTIONS WHICH MAY BE RECORDED AGAINST THE PROPERTY OR TO OBTAIN PLANS. YOU SHOULD CONTACT YOUR COMMUNITY ASSOCIATIONS PRIOR TO COMMENCEMENT OF ANY CONSTRUCTION AUTHORIZED BY THIS PERMIT.
2. PRIOR TO PERFORMING ANY WORK IN THE RIGHT-OF-WAY AN ENCROACHMENT PERMIT MUST BE OBTAINED FROM THE PUBLIC WORKS DEPARTMENT.
3. EQUIPMENT PADS, CONCRETE LANDING, GRAVEL IN LEASE AREA, CMU WALLS, AND OTHER SITE ELEMENTS ARE PER ARCHITECTURAL PLANS AND DETAILS.
4. ENGINEERS ESTIMATE OF EARTHWORK VOLUMES IS BASED ON TOPOGRAPHICAL INFORMATION PROVIDED BY OTHERS AND DOES NOT INCLUDE TRENCH SPOILS FOR UTILITY TRENCHING, SHRINK/SWELL FACTORS, OR EXCAVATION VOLUMES FOR RETAINING WALLS, TOWERS, CONCRETE PADS OR OTHER STRUCTURAL SECTIONS. IT SHALL BE THE RESPONSIBILITY OF THE CONTRACTOR TO VERIFY ALL EARTHWORK QUANTITIES PRIOR TO BID.

| ESTIMATED EARTHWORK SUMMARY (CY) | | | | |
|---|---|---|---|---|
| | CUT | FILL | NET (CUT-FILL) | |
| RAW SURFACE GRADING | 76.16 | 0.21 | 75.95 | |
| SECTION ADJUSTMENTS | | | | |
| LEASE AREA (6" AB) | | -17.33 | 17.33 | |
| GRAVEL LEASE AREA (3" of 3/4" ROCK) | | -5.56 | 5.56 | |
| | | 0.00 | 0.00 | |
| TOTAL | 76.16 | -22.68 | 98.84 | CUT(EXPORT) |

DISTURBED AREA= 0.020 ACRES
MAX CUT DEPTH= 8.911 FT
MAX FILL HEIGHT= 1.067 FT

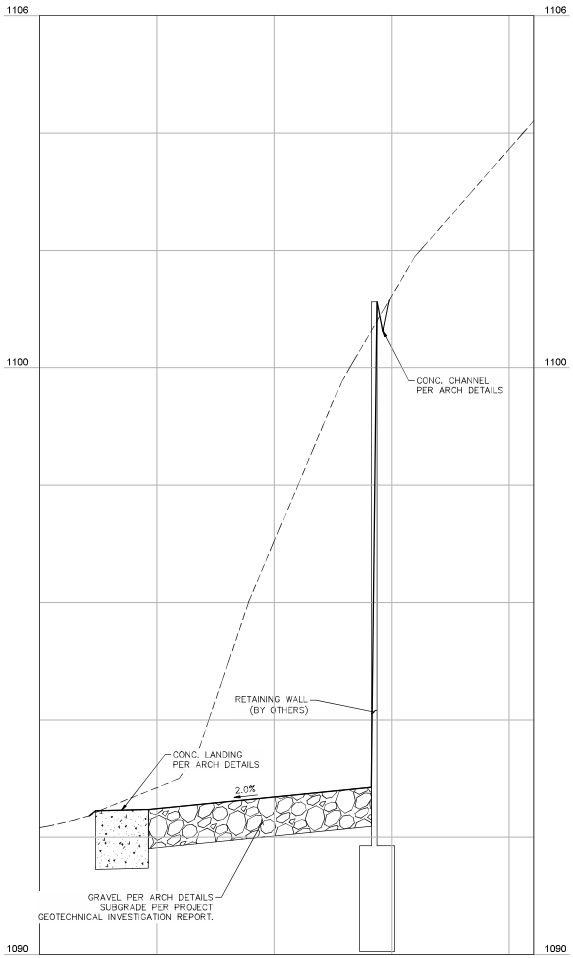


SECTION A-A

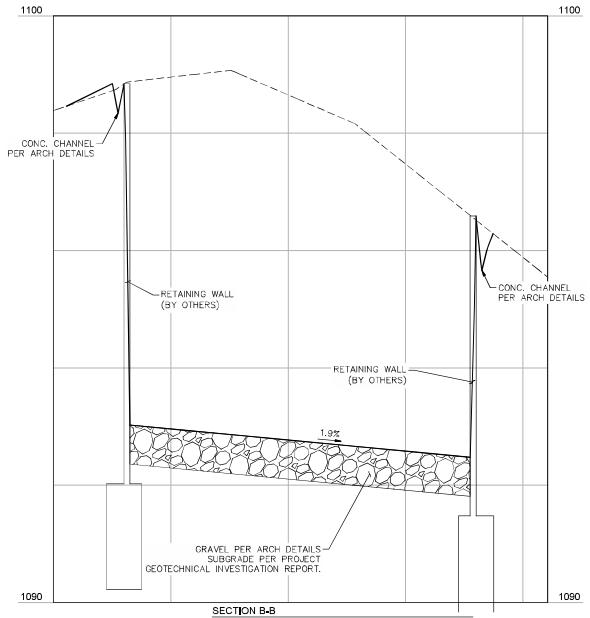


SECTION B-B

0 10 20 Feet
H. SCALE: 1"=5'
0 2 4 Feet
V. SCALE: 1"=1'

DIGALERT
DIAL BEFORE YOU DIG
TWO WORKING DAYS BEFORE YOU DIG
TOLL FREE 800-227-2600
A PUBLIC SERVICE BY UNDERGROUND SERVICE ALERT

PROJECT:
CLL05599
1765 HILLFAIR DR.
GLENDALE, CA 91208

PREPARED FOR:
The new at&t
1452 EDINGER AVENUE,
3RD FLOOR
TUSTIN, CA 92780

VENDOR:
Eukon
an SFC Communications, Inc. Company
65 POST, SUITE 1000
IRVINE, CA 92815
TEL: (949) 553-8566
www.eukongroup.com

| | |
|---|---|
| SITE NO: | CLL05599 |
| JDC PROJ NO: | 22005005 |
| DRAWN BY: | JDC |
| CHECKED BY: | JDC |

| REV | DATE | DESCRIPTION |
|---|---|---|
| | | |

ENGINEER OF RECORD:
REGISTERED PROFESSIONAL ENGINEER JOHN CHRISTIANSEN No. C89629 Civil STATE OF CALIFORNIA
DATE: 12/27/2022

IT IS A VIOLATION OF LAW FOR ANY PERSON, UNLESS ACTING UNDER THE DIRECTION OF THE ABOVE LISTED LICENSED PROFESSIONAL ENGINEER, TO ALTER THIS DOCUMENT.

ENGINEERING FIRM:
JD DESIGN
& CONSULTING ENGINEERS
15016 Lago Drive, Rancho Murieta, CA 95683

SHEET TITLE:
SITE GRADING PLAN

SHEET NUMBER:
C1.1

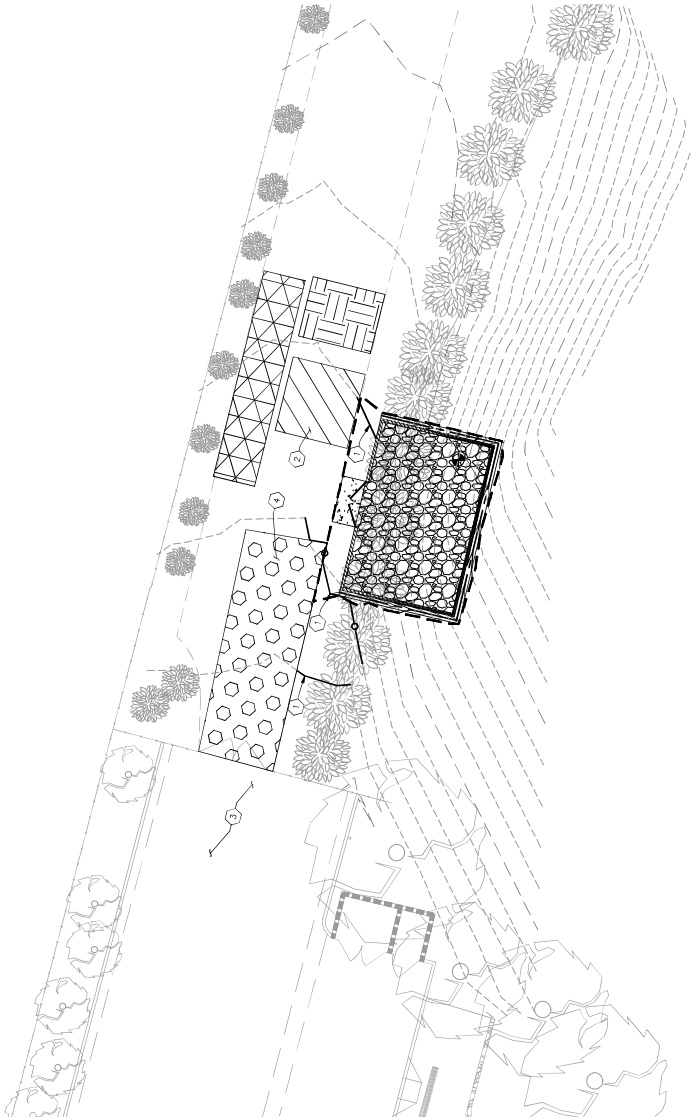

## LEGEND:

- PROPERTY LINE
- RIGHT OF WAY
- EXISTING EASEMENT
- CENTER LINE
- OH — EXISTING OVERHEAD LINE
- EXISTING ROAD
- X — EXISTING FENCE
- PROPOSED FENCE
- 280 — EXISTING CONTOUR
- 280 — PROPOSED CONTOUR
- CIVIL LIMIT OF WORK
- E — PROPOSED ELECTRICAL LINE
- PROPOSED FIBER ROLL
- STOCKPILE AREA
- MATERIAL STOAGE AND DELIVERY
- SANITARY AREA, TRASH STORAGE, HAZARDOUS MATERIAL, CONCRETE MANAGEMENT
- CONSTRUCTION ENTRANCE

## EROSION CONTROL NOTES

1. CONSTRUCT PERIMETER EROSION CONTROL – UTILIZE FIBER ROLLS PER CASQA BMP FACT SHEET SE-5.
2. PROPOSED SITE CONCRETE WASHOUT PER CASQA BMP FACT SHEET WM-8.
3. CONTRACTOR SHALL SWEEP ASPHALT & CONCRETE PAVEMENT FREQUENTLY TO CLEAN TRACKED MATERIALS AND PREVENT SEDIMENT TRANSPORT TO DRAINAGE FACILITIES.
4. PROPOSED TEMPORARY STABILIZED CONSTRUCTION ENTRANCE AND EXIT PER CASQA BMP FACT SHEET TE-1.

NOTE: ALL AREAS THAT ARE DISTURBED SHALL BE STABILIZED WITH PERMANENT EROSION CONTROL MEASURES PRIOR TO CONTRACT CLOSEOUT. ALL SLOPES SHALL BE TRACK WALKED PER CASQA BMP FACT SHEET EC-15 AND HYRDROSEEDED PER CASQA BMP FACT SHEET EC-4.

0 20 40 Feet

H. SCALE: 1"=10'

PROJECT:

CLL05599
1765 HILLFAIR DR.
GLENDALE, CA 91208

PREPARED FOR:

The new at&t
1452 EDINGER AVENUE,
3RD FLOOR
TUSTIN, CA 92780

VENDOR:

Eukon
an SFC Communications, Inc. Company
65 POST, SUITE 1000
IRVINE, CA 92815
TEL: (949) 553-8566
www.eukongroup.com

| | |
|---|---|
| SITE NO: | CLL05599 |
| JDC PROJ NO: | 22005005 |
| DRAWN BY: | JDC |
| CHECKED BY: | JDC |

| REV | DATE | DESCRIPTION |
|---|---|---|
| | | |

ENGINEER OF RECORD:

REGISTERED PROFESSIONAL ENGINEER
JOHN CHRISTIANSEN
No. C89629
Civil
STATE OF CALIFORNIA

DATE: 12/27/2022

IT IS A VIOLATION OF LAW FOR ANY PERSON, UNLESS ACTING UNDER THE DIRECTION OF THE ABOVE LISTED LICENSED PROFESSIONAL ENGINEER, TO ALTER THIS DOCUMENT.

ENGINEERING FIRM:

JD DESIGN
& CONSULTING ENGINEERS
15016 Lago Drive, Rancho Murieta, CA 95683

SHEET TITLE:

EROSION CONTROL PLAN

SHEET NUMBER:

C1.2

## Stabilized Construction Entrance/Exit TC-1

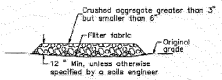


SECTION B–B
NTS

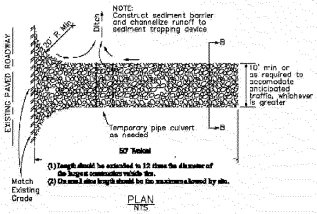


PLAN
NTS



## Check Dams SE-4

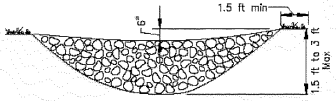


ELEVATION

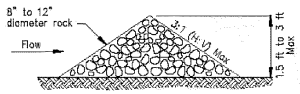


TYPICAL ROCK CHECK DAM SECTION

ROCK CHECK DAM
NOT TO SCALE

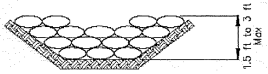


GRAVEL BAG CHECK DAM ELEVATION
NOT TO SCALE



## Fiber Rolls SE-5

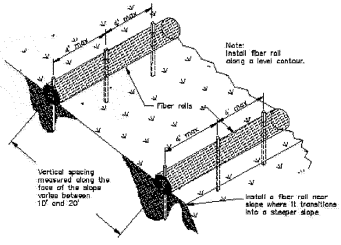


TYPICAL FIBER ROLL INSTALLATION
N.T.S.

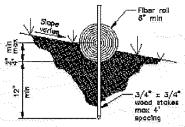


ENTRENCHMENT DETAIL
N.T.S.



## Concrete Waste Management WM-8

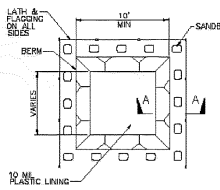


PLAN
NOT TO SCALE
TYPE "BELOW GRADE"

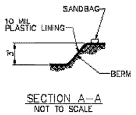


SECTION A–A
NOT TO SCALE

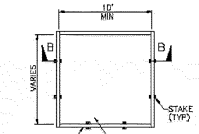


PLAN
NOT TO SCALE
TYPE "ABOVE GRADE"

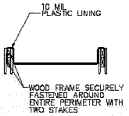


SECTION B–B
NOT TO SCALE

NOTES

1. ACTUAL LAYOUT DETERMINED IN FIELD.
2. THE CONCRETE WASHOUT SIGN SHALL BE INSTALLED WITHIN 30 FT. OF THE TEMPORARY CONCRETE WASHOUT FACILITY.



## Concrete Waste Management WM-8

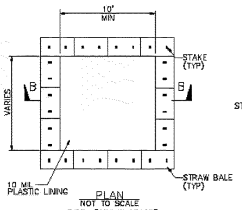


PLAN
NOT TO SCALE
TYPE "ABOVE GRADE" WITH STRAW BALES

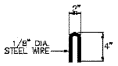


STAPLE DETAIL

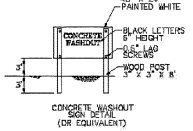


CONCRETE WASHOUT SIGN DETAIL
(OR EQUIVALENT)

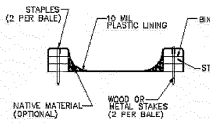


SECTION B–B
NOT TO SCALE

NOTES

1. ACTUAL LAYOUT DETERMINED IN FIELD.
2. THE CONCRETE WASHOUT SIGN SHALL BE INSTALLED WITHIN 30 FT. OF THE TEMPORARY CONCRETE WASHOUT FACILITY.



PROJECT:

CLL05599
1765 HILLFAIR DR.
GLENDALE, CA 91208

PREPARED FOR:

The new at&t
1452 EDINGER AVENUE,
3RD FLOOR
TUSTIN, CA 92780

VENDOR:

Eukon
an SFC Communications, Inc. Company
65 POST, SUITE 1000
IRVINE, CA 92815
TEL: (949) 553-8566
www.eukongroup.com

| | |
|---|---|
| SITE NO: | CLL05599 |
| JDC PROJ NO: | 22005005 |
| DRAWN BY: | JDC |
| CHECKED BY: | JDC |

| REV | DATE | DESCRIPTION |
|---|---|---|
| | | |

ENGINEER OF RECORD:

REGISTERED PROFESSIONAL ENGINEER
JO CHRISTIANSEN
No. C89629
Civil
STATE OF CALIFORNIA

DATE: 12/27/2022



ENGINEERING FIRM:

JD DESIGN
& CONSULTING ENGINEERS
15018 Lago Drive, Rancho Murieta, CA 95683

SHEET TITLE:

EROSION CONTROL DETAILS

SHEET NUMBER:

C1.3

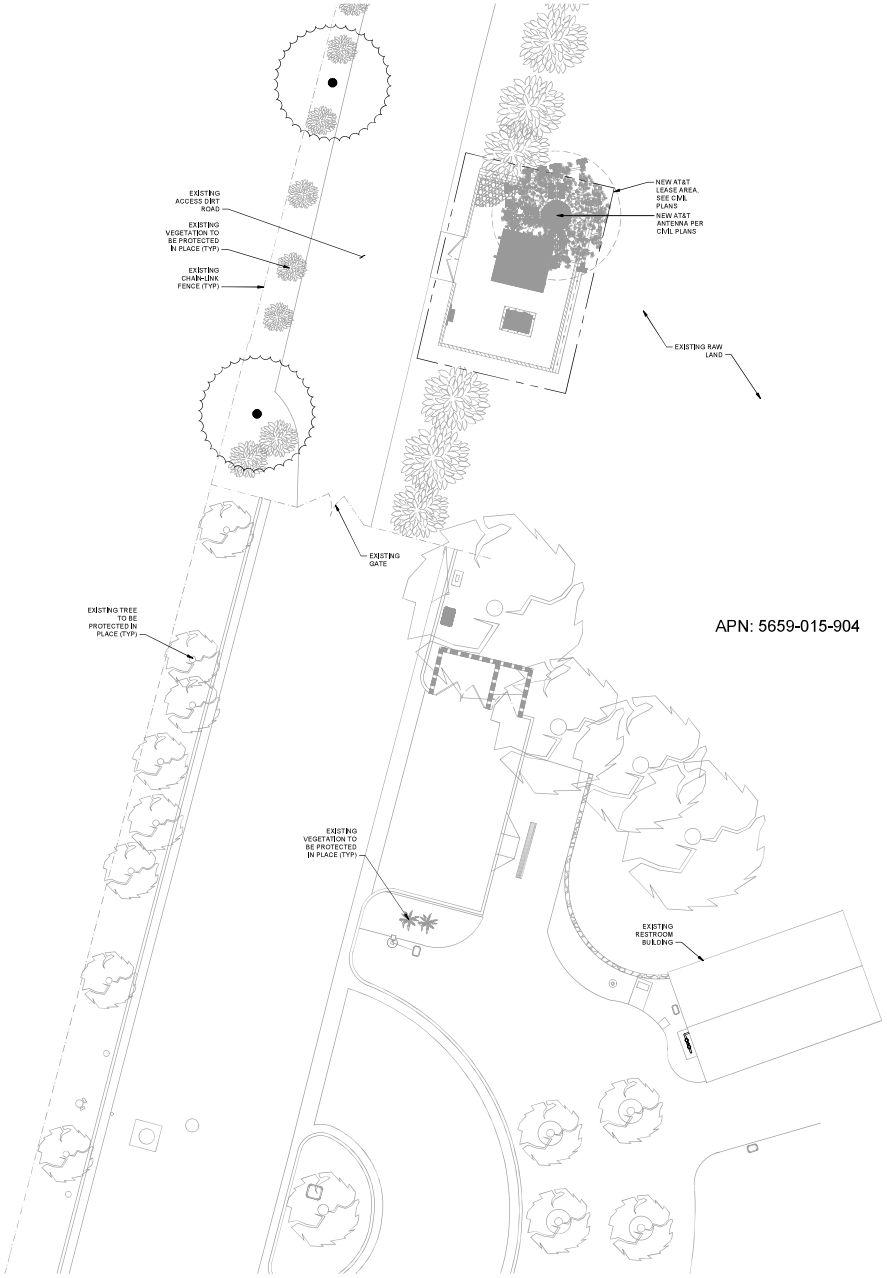


APN: 5659-015-904

## PLANT SCHEDULE

| TREES | QTY | BOTANICAL / COMMON NAME | CONT | HEIGHT/SPREAD | CAL. | WUCOLS |
|---|---|---|---|---|---|---|
| | 2 | PINUS MONOPHYLLA / PIÑON PINE | 24" BOX | 8'-10' HT. X 4'-5' SPR. | 1" CAL. | VERY LOW |

AFTER ROUGH GRADING HAS OCCURRED, CONTRACTORS SHALL OBTAIN AN AGRONOMIC SOILS REPORT AND SUBMIT TO LANDSCAPE ARCHITECT FOR APPROVAL PRIOR TO AMENDMENTS AND/OR PLANTING

CONTRACTOR SHALL APPLY RECOMMENDATION UNLESS OTHERWISE NOTED BY LANDSCAPE ARCHITECT

NORTH

GRAPHIC SCALE IN FEET
0 5 10 20

APPLICANT:

The new at&t

1452 EDINGER AVENUE,
3RD FLOOR
TUSTIN, CA 92780

ENGINEER:

Eukon
an SFC Communications, Inc. Company
65 POST, SUITE 1000
IRVINE, CA 92618
TEL: (949) 553-8566
www.eukongroup.com



| | |
|---|---|
| DRAWN BY: | MG |
| CHECKED BY: | RB |

REVISIONS:

| REV | DATE | DESCRIPTION |
|---|---|---|
| 0 | 03/27/23 | 100% CONSTRUCTION DRAWING |
| B | 03/09/23 | JURISDICTION COMMENTS |
| A | 01/12/23 | 90% CONSTRUCTION DRAWING |

LICENSEE:

8/31/2023
4/18/2023

PROJECT INFORMATION:

CLL05599

1765 HILLFAIR DR.
GLENDALE, CA 91208

SHEET TITLE:

**LANDSCAPE PLAN**

SHEET NUMBER:

L-1

## LANDSCAPE ARCHITECT NOTES

1. THE TERM "LANDSCAPE ARCHITECT" USED HEREIN SHALL MEAN THE LANDSCAPE ARCHITECT WHO HAS SIGNED AND SEALED THESE PLANS AND IS IN RESPONSIBLE CHARGE OF THE LANDSCAPE ARCHITECTURE DESIGN. THE TERM "CONTRACTOR" USED HEREIN SHALL MEAN ANY GENERAL CONTRACTOR OR SUBCONTRACTOR USING THESE PLANS. ANY AGENCY SIGNATURE OR APPROVAL ON THESE PLANS DOES NOT CONSTITUTE APPROVAL OF ANY OF THESE NOTES.
2. THE LANDSCAPE ARCHITECT WILL NOT PROVIDE, OBSERVE, COMMENT ON NOR ENFORCE ANY SAFETY MEASURES OR REGULATIONS. THE CONTRACTOR SHALL DESIGN, CONSTRUCT, AND MAINTAIN ALL SAFETY MEASURES AND SHALL BE SOLELY RESPONSIBLE FOR SAME AND COMPLYING WITH ALL LOCAL, STATE AND FEDERAL SAFETY AND HEALTH STANDARDS, LAWS, AND REGULATIONS. THE CONTRACTOR AGREES THAT SHE/HE SHALL ASSUME SOLE AND COMPLETE RESPONSIBILITY FOR JOBSITE CONDITIONS AND SAFETY OF ALL PERSONS AND PROPERTY DURING THE COURSE OF CONSTRUCTION OF THIS PROJECT. THIS REQUIREMENT SHALL APPLY CONTINUOUSLY AND NOT BE LIMITED TO NORMAL WORKING HOURS.
3. THE LANDSCAPE ARCHITECT SHALL HAVE NO RESPONSIBILITY FOR ANY OF THE CONTRACTOR'S MEANS AND METHODS OF CONSTRUCTION, TECHNIQUES, EQUIPMENT CHOICE AND USAGE, SEQUENCE, SCHEDULE, SAFETY PROGRAMS, OR SAFETY PRACTICES, NOR SHALL THE LANDSCAPE ARCHITECT HAVE ANY AUTHORITY OR RESPONSIBILITY TO STOP OR DIRECT THE WORK OF ANY CONTRACTOR.
4. THE CONTRACTOR SHALL DEFEND, INDEMNIFY, AND HOLD THE LANDSCAPE ARCHITECT AND OWNER, THEIR AGENTS AND EMPLOYEES, HARMLESS FROM ANY AND ALL CLAIMS, DEMANDS, JUDGMENTS, LOSS, DAMAGES, COSTS, EXPENSES, FEES OR LIABILITY WHATSOEVER, REAL OR ALLEGED, IN CONNECTION WITH, IN WHOLE OR IN PART, DIRECTLY OR INDIRECTLY, THE PERFORMANCE OF WORK ON THIS PROJECT, EXCEPTING LIABILITY ARISING FROM THE SOLE NEGLIGENCE OF THE OWNER OR THE LANDSCAPE ARCHITECT.
5. IF THERE ARE ANY QUESTIONS REGARDING THESE PLANS, THE CONTRACTOR SHALL REQUEST IN WRITING FROM THE LANDSCAPE ARCHITECT AND THE OWNER, AN INTERPRETATION BEFORE DOING ANY RELATED OR IMPACTED WORK.
6. THE CONTRACTOR SHALL TAKE THE NECESSARY STEPS TO PROTECT THE PROPERTY FROM ANY EROSION AND SILTATION THAT RESULT FROM CONTRACTOR OPERATIONS BY APPROPRIATE MEANS UNTIL SUCH TIME THAT THE PROJECT IS COMPLETED AND ACCEPTED FOR MAINTENANCE BY WHOMEVER IS TO BE ULTIMATELY RESPONSIBLE FOR MAINTENANCE.
7. THE CONTRACTOR SHALL NOTIFY ALL UTILITY COMPANIES PRIOR TO STARTING WORK NEAR THEIR FACILITIES AND SHALL COORDINATE WORK WITH UTILITY COMPANY REPRESENTATIVES.
8. THE EXISTENCE AND LOCATION OF UNDERGROUND UTILITIES OR STRUCTURES SHOWN ON THESE PLANS WERE OBTAINED FROM A SEARCH OF READILY AVAILABLE RECORDS. NO REPRESENTATION IS MADE AS TO THE ACCURACY OR COMPLETENESS OF SAID UTILITY INFORMATION. THE CONTRACTOR IS REQUIRED TO TAKE PRECAUTIONARY MEASURES TO PROTECT THE UTILITY LINES SHOWN HEREON AND ANY OTHERS NOT OF RECORD OR NOT SHOWN ON THESE PLANS. ALL DAMAGES THERETO CAUSED BY THE CONTRACTOR SHALL BE REPAIRED TO THE APPROPRIATE SPECIFICATIONS AND STANDARDS AT THE SOLE EXPENSE OF THE CONTRACTOR.
9. THE LOCATION, ELEVATIONS, SIZE, TYPE AND CONDITION OF EXISTING IMPROVEMENTS ADJACENT TO THE PROPOSED WORK INDICATED ON THESE PLANS SHALL BE CONFIRMED BY THE CONTRACTOR BY FIELD MEASUREMENTS AND OBSERVATIONS PRIOR TO CONSTRUCTION OF NEW WORK. THE CONTRACTOR WILL IMMEDIATELY INFORM THE LANDSCAPE ARCHITECT IN WRITING IF ANY DISCREPANCIES OR CONFLICTING INFORMATION IS FOUND.
10. THE CONTRACTOR SHALL MAKE EXPLORATORY EXCAVATIONS AND LOCATE EXISTING UNDERGROUND FACILITIES AS NEEDED, SUFFICIENTLY AHEAD OF CONSTRUCTION TO PERMIT REVISIONS TO PLANS IF REVISIONS ARE NECESSARY DUE TO THE ACTUAL LOCATION, SIZE, TYPE, OR CONDITION OF EXISTING FACILITIES DIFFERING FROM WHAT IS SHOWN ON THESE PLANS.
11. THE CONTRACTOR SHALL BE RESPONSIBLE FOR REMOVAL OF ANY DAMAGE TO THE EXISTING IMPROVEMENTS AND REPLACEMENT TO THE SATISFACTION OF THE OWNER.
12. SHOULD CONFLICTING INFORMATION BE FOUND ON THE PLANS THE CONTRACTOR SHALL NOTIFY THE LANDSCAPE ARCHITECT IN WRITING IMMEDIATELY BEFORE PROCEEDING WITH THE WORK IN QUESTION.
13. ANYTHING MENTIONED IN THE SPECIFICATIONS, IF ANY, AND NOT SHOWN ON THE DRAWINGS, OR SHOWN ON THE DRAWINGS AND NOT MENTIONED IN THE SPECIFICATIONS, SHALL BE OF LIKE EFFECT AS IF SHOWN OR MENTIONED IN BOTH.

## GENERAL LANDSCAPE NOTES

1. THE WORK SHALL BE DONE IN ACCORDANCE WITH THE PLANS AND THE MOST CURRENT EDITION OF THE APPLICABLE CITY AND/OR REGIONAL STANDARDS. IT SHALL BE THE CONTRACTOR'S RESPONSIBILITY TO OBTAIN COPIES OF THESE STANDARDS, SPECIFICATIONS AND DRAWINGS, AS WELL AS ALL OTHER STANDARDS AND SPECIFICATIONS WHICH MAY BE NECESSARY TO COMPLETE AND ACCURATELY INTERPRET THESE PLANS.
2. ALL QUANTITIES LISTED IN THE LANDSCAPE SCHEDULE ARE FOR THE CONVENIENCE OF THE CONTRACTOR. IN THE CASE OF ANY DISCREPANCIES, PLANS SHALL OVERRIDE THE LANDSCAPE AND BID SCHEDULE QUANTITIES. CONTRACTOR SHALL VERIFY QUANTITIES SHOWN ON THE PLANS AND BASE THEIR BID ACCORDINGLY.
3. RESPONSIBILITY FOR ESTABLISHING SUBGRADES IS NOT INCLUDED IN THIS WORK. INSPECT SUBGRADES PRIOR TO COMMENCING WORK TO CONFIRM SUBGRADE DEPTHS AND GRADES. ADVISE LANDSCAPE ARCHITECT OF DISCREPANCIES WITH DRAWINGS OR SPECIFICATIONS. ALL PLANTING AREAS SHALL BE LEFT FREE OF CONSTRUCTION DEBRIS AND/OR TOXIC MATERIAL AND GRADED TO A LEVEL TO PERMIT LANDSCAPE CONSTRUCTION. TRENCHES OR OTHER FILLED EXCAVATIONS SHALL BE COMPACTED PRIOR TO LANDSCAPE INSTALLATION.
4. SITE GRADING NECESSITATED BY THE WORK AS IT PROGRESSES AND NOT SPECIFICALLY CALLED OUT ON THE PLANS WILL BE CONSIDERED INCIDENTAL WORK.
5. ALL LANDSCAPE AREAS SHALL BE UNIFORMLY GRADED SO THAT FINISHED SURFACES CONFORM TO THE TYPICAL SECTIONS AND PROPOSED GRADES SHOWN. FINISHED SURFACES SHALL BE REASONABLY SMOOTH, COMPACTED, AND FREE FROM IRREGULAR SURFACE DRAINAGE. THE LANDSCAPE CONTRACTOR SHALL BE RESPONSIBLE FOR ESTABLISHING THE FINISH GRADE AND SHALL BEAR FINAL RESPONSIBILITY FOR PROPER SURFACE DRAINAGE OF PLANTED AREAS.
11. AFTER ROUGH GRADING HAS OCCURRED, CONTRACTOR SHALL OBTAIN AN AGRONOMIC SOILS REPORT AND SUBMIT TO LANDSCAPE ARCHITECT FOR APPROVAL PRIOR TO AMENDMENTS AND/OR PLANTING. CONTRACTOR SHALL APPLY RECOMMENDATIONS UNLESS OTHERWISE NOTED BY LANDSCAPE ARCHITECT.
12. BACKFILL MIX SHALL BE PLACED IN 6" LIFTS AND TAMPED INTO PLACE AROUND THE PLANT. NO TRANSPLANTING SHALL BE DONE WHEN SOIL IS EXCESSIVELY WET. DO NOT COUNTERSINK AROUND CACTI OR SUCCULENTS. PROVIDE POSITIVE DRAINAGE AWAY FROM PLANT.
13. ALL TREES SHALL BE PLANTED A MINIMUM OF 5 FEET FROM EDGE OF CURBS, WALKS, WALLS, PADS, ETC., UNLESS DIRECTED OTHERWISE BY THE LANDSCAPE ARCHITECT.
14. EXCAVATE PITS, AS SHOWN ON DRAWINGS AND DETAILS. LOOSEN HARD SUBSOIL IN BOTTOM OF PIT. TEST DRAINAGE OF TREE, SHRUB AND PLANT PITS BY FILLING WITH WATER TWICE IN SUCCESSION. THE RETENITION OF WATER IN PLANTING PITS FOR MORE THAN TWENTY-FOUR (24) HOURS SHALL BE BROUGHT TO THE ATTENIUN OF THE OWNER'S REPRESENTATIVE, SUBMIT IN WRITING A PROPOSAL FOR THE CORRECTION TO THE OWNER'S REPRESENTATIVE FOR APPROVAL BEFORE PROCEEDING WITH WORK.
15. IF ROCK, UNDERGROUND CONSTRUCTION, ADVERSE DRAINAGE CONDITIONS, OR OTHER OBSTRUCTIONS ARE ENCOUNTERED IN EXCAVATION FOR PLANTING OF ANY PLANT MATERIAL, NOTIFY THE OWNER'S REPRESENTATIVE. NEW LOCATIONS MAY BE SELECTED BY THE OWNER'S REPRESENTATIVE, OR INSTRUCTIONS MAY BE ISSUED TO DIRECT REMOVAL OF OBSTRUCTION. PROCEED WITH WORK ONLY AFTER APPROVAL OF THE OWNER'S REPRESENTATIVE.
16. DO NOT MAKE SUBSTITUTIONS. IF SPECIFIED LANDSCAPE MATERIAL IS NOT OBTAINABLE, SUBMIT PROOF OF NON-AVAILABILITY FROM AT LEAST FIVE SOURCES TO THE OWNER'S REPRESENTATIVE, TOGETHER WITH PROPOSAL FOR USE OF EQUIVALENT MATERIAL FOR FINAL APPROVAL.
17. ALL PLANT MATERIAL AND SPECIFICATIONS TO CONFORM TO THE AMERICAN STANDARD FOR NURSERY STOCK STANDARDS UNLESS OTHERWISE NOTED.
18. LAY OUT INDIVIDUAL TREE AND PLANT LOCATIONS AND AREAS FOR MULTIPLE PLANTINGS. STAKE LOCATIONS AND OUTLINE AREAS AND SECURE THE OWNER'S REPRESENTATIVE'S ACCEPTANCE BEFORE START OF PLANTING WORK. MAKE MINOR ADJUSTMENTS AS DIRECTED.
19. FINISH GRADE FOR PLANTED AREAS SHALL BE 1" BELOW ALL CURBS, WALKS AND PAVING WITH SMOOTH EVEN LINES AT EDGES OF STRUCTURES.
20. FINISH LANDSCAPE GRADES SHALL SLOPE AT A 2% GRADE AWAY FROM CURBS, WALKS, AND WALLS.
21. ALL LANDSCAPE AREAS SHALL RECEIVE A 3" DEPTH OF MULCH, UNLESS OTHERWISE NOTED ON THESE PLANS, 6" DIAMETER AROUND TREE TRUNKS SHALL BE FREE OF MULCH, MULCH SHALL EXTEND UNDER ALL SHRUBS AND PLANTS. APPLY PRE-EMERGENT HERBICIDE PRIOR TO AND AFTER MULCH INSTALLATION.
22. NO JOB WILL BE CONSIDERED COMPLETE UNTIL ALL CURBS, PAVEMENT AND SIDEWALKS HAVE BEEN SWEPT CLEAN OF ALL DIRT AND DEBRIS ACCORDING TO PLANS.
23. IT IS THE SOLE RESPONSIBILITY OF THE CONTRACTOR TO OBTAIN ANY PERMITS REQUIRED. (SEE THE CITY GENERAL CONDITIONS)
24. ALL CONSTRUCTION ROADS AND COMPACTED AREAS DEVELOPED THROUGH CONSTRUCTION THAT ARE WITHIN THE LANDSCAPE AREAS SHALL BE SCARIFIED AND LOOSENED TO A DEPTH OF 12" PRIOR TO LANDSCAPE AND IRRIGATION WORK BEGINNING

AFTER ROUGH GRADING HAS OCCURRED, CONTRACTORS SHALL OBTAIN AN AGRONOMIC SOILS REPORT AND SUBMIT TO LANDSCAPE ARCHITECT FOR APPROVAL PRIOR TO AMENDMENTS AND/OR PLANTING

CONTRACTOR SHALL APPLY RECOMMENDATION UNLESS OTHERWISE NOTED BY LANDSCAPE ARCHITECT

I HAVE COMPLIED WITH THE CRITERIA OF THE ORDINANCE AB-1881 AND APPLIED THEM FOR THE EFFICIENT USE OF WATER IN THE LANDSCAPE DESIGN PLAN.

MICHAEL P. MADSEN, LLA 5798

NOTES:
1. REFERENCE PLANTING SPECIFICATIONS/ SPECIAL PROVISIONS FOR ADDITIONAL INFORMATION.
2. DOUBLE STAKE ALL TREES #15 (15 GAL.) SIZE AND LARGER.
3. FOR SINGLE STAKED TREES, PLACE STAKE ON WINDWARD SIDE OF TREE.
4. FOR DOUBLE STAKED TREES, PLACE STAKES PERPENDICULAR TO WINDWARD SIDE OF TREE.
5. LOCATE ALL STAKES OUTSIDE OF ROOTBALL. DO NOT DRIVE STAKES INTO ROOTBALL. STAKE SHALL BE DRIVEN MIN. 24" INTO NATIVE SOIL AT BOTTOM OF PLANTING PIT.
6. REMOVE ANYTHING (IE, BURLAP, WIRES, STRAPS, ETC.) THAT COULD GIRDLE TREE OR RESTRICT TREE GROWTH.

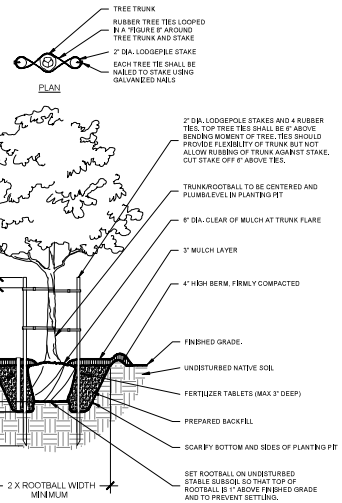


A TYPICAL TREE PLANTING

NTS

APPLICANT:

The new at&t

1452 EDINGER AVENUE,
3RD FLOOR
TUSTIN, CA 92780

ENGINEER:

Eukon
an SFC Communications, Inc. Company
65 POST, SUITE 1000
IRVINE, CA 92618
TEL: (949) 553-8566
www.eukongroup.com

THIS PAGE CONTAINS CONFIDENTIAL, PROPRIETARY OR TRADE SECRET INFORMATION EXEMPT FROM DISCLOSURE UNDER APPLICABLE LAW.

| | |
|---|---|
| DRAWN BY: | MG |
| CHECKED BY: | RB |

REVISIONS:

| REV | DATE | DESCRIPTION |
|---|---|---|
| 0 | 03/27/23 | 100% CONSTRUCTION DRAWING |
| B | 03/09/23 | JURISDICTION COMMENTS |
| A | 01/12/23 | 90% CONSTRUCTION DRAWING |

LICENSEE:

MICHAEL P. MADSEN
No. 5798
LANDSCAPE ARCHITECT
STATE OF CALIFORNIA
8/31/2023
PROFESSIONAL ENGINEER
4/18/2023
No.
STATE OF CALIFORNIA

PROJECT INFORMATION:

CLL05599

1765 HILLFAIR DR.
GLENDALE, CA 91208

SHEET TITLE:

**LANDSCAPE DETAILS**

SHEET NUMBER:

L-2

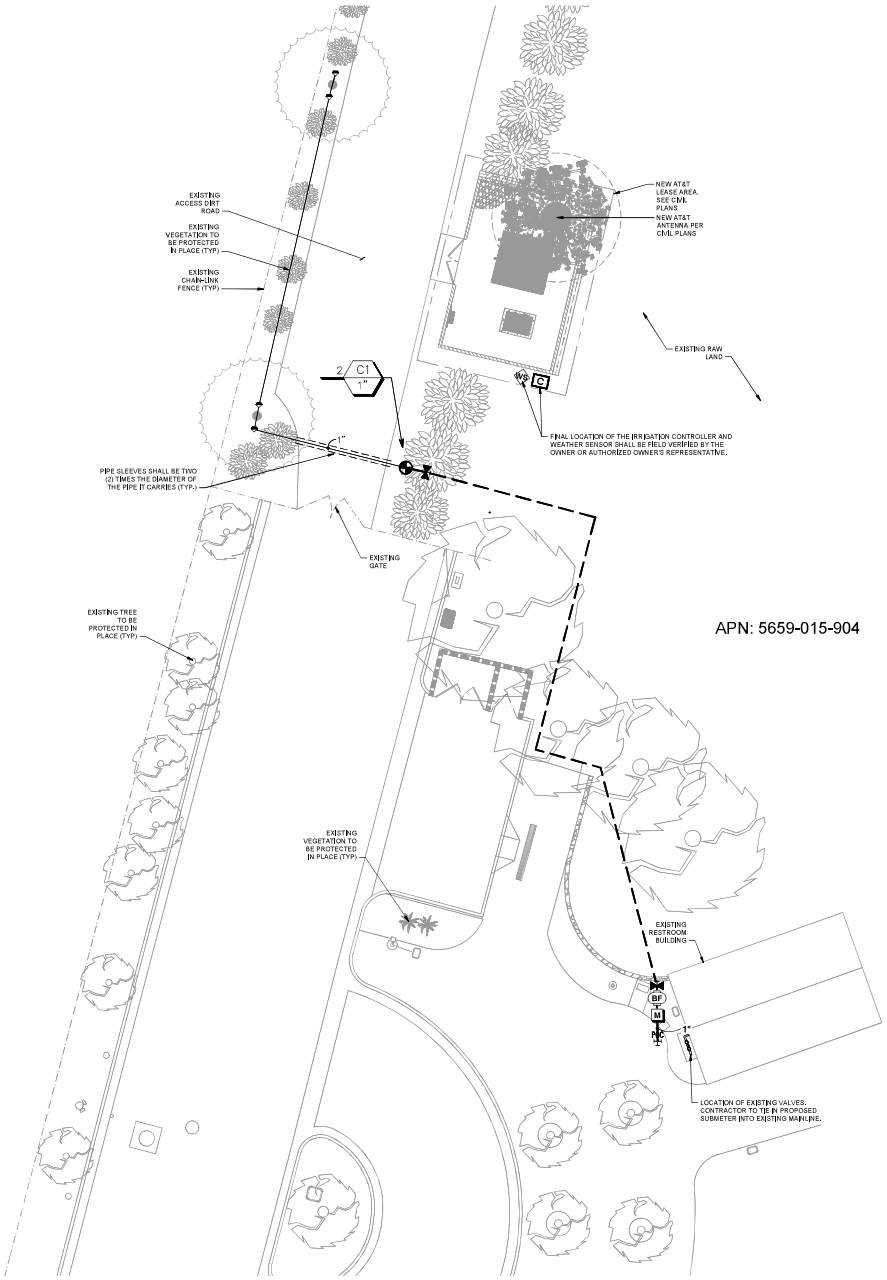


## IRRIGATION SCHEDULE

| SYMBOL | MANUFACTURER/MODEL/DESCRIPTION | QTY | PSI | DETA |
|---|---|---|---|---|
| 25Q 50Q 50H 10H 10F 20F | HUNTER PROS-PRS30-06-MSBN MULTI-STREAMER BUBBLER, 6IN. POP-UP, 25=.25GPM, 50=0.5GPM, 10=1.0GPM, 20=2.0GPM. | 4 | 30 | |

| SYMBOL | MANUFACTURER/MODEL/DESCRIPTION | QTY |
|---|---|---|
| | HUNTER ICV-G 1IN PLASTIC ELECTRIC REMOTE CONTROL VALVES, GLOBE CONFIGURATION, WITH NPT THREADED INLET/OUTLET, FOR COMMERCIAL/MUNICIPAL USE. | 1 |
| | LANDSCAPE PRODUCTS INC. BGV BRASS GATE VALVE. THREADED BONNET, NON-RISING STEM, PRESSURE RATED TO 200 PSI. SAME SIZE AS MAINLINE. | 2 |
| BF | FEBCO 825Y 1" REDUCED PRESSURE BACKFLOW PREVENTER | 1 |
| C | HUNTER NODE-100 SINGLE STATION CONTROLLER, OUTDOOR, BATTERY POWERED. DC LATCHING SOLENOID INCLUDED. | 1 |
| WS | HUNTER RAIN-CLIK RAIN SENSOR, WITH CONDUIT INSTALLATION, MOUNT AS NOTED. NORMALLY CLOSED SWITCH. | 1 |
| M | WATER METER 1-1/2" NETAFIM HYDROMETER MODEL# LHM15TG1-MEL | 1 |
| POC | POINT OF CONNECTION 1" EXISTING WATER VALVE MANIFOLD | 1 |
| | IRRIGATION LATERAL LINE: PVC SCHEDULE 40 | 89.8 L.F. |
| | IRRIGATION MAINLINE: PVC SCHEDULE 40 | 133.5 L.F. |
| | PIPE SLEEVE: PVC SCHEDULE 40 | 16.6 L.F. |

Valve Callout
- Valve Number
- Controller Letter
- Valve Flow
- Valve Size

CONTRACTOR SHALL CHECK SOIL MOISTURE AT LEAST WEEKLY WITH MOISTURE PROBE. SAMPLE THE ROOT BALL AND SURROUNDING SOIL. SOIL SHOULD BE MOIST THROUGHOUT THE SOIL PROFILE. THE ROOT BALL MUST NOT BE ALLOWED TO DRY OUT OR BE ALLOWED TO SIT IN STANDING WATER-EVER.
ADJUST WATERING SCHEDULE BASED UPON RESULTS.

NORTH

GRAPHIC SCALE IN FEET
0 # ## ##

APPLICANT:

The new at&t
1452 EDINGER AVENUE,
3RD FLOOR
TUSTIN, CA 92780

ENGINEER:

Eukon
an SFC Communications, Inc. Company
65 POST, SUITE 1000
IRVINE, CA 92618
TEL: (949) 553-8566
www.eukongroup.com



| | |
|---|---|
| DRAWN BY: | MG |
| CHECKED BY: | RB |

REVISIONS:

| REV | DATE | DESCRIPTION |
|---|---|---|
| 0 | 03/27/23 | 100% CONSTRUCTION DRAWING |
| B | 03/09/23 | JURISDICTION COMMENTS |
| A | 01/12/23 | 90% CONSTRUCTION DRAWING |

LICENSEE:

Donald P. Martin
8/31/2023
4/18/2023
LICENSED LANDSCAPE ARCHITECT

PROJECT INFORMATION:

CLL05599

1765 HILLFAIR DR.
GLENDALE, CA 91208

SHEET TITLE:

**IRRIGATION PLAN**

SHEET NUMBER:

L-3

## IRRIGATION SCHEDULE

| SYMBOL | MANUFACTURER/MODEL/DESCRIPTION | QTY | PSI |
|---|---|---|---|
| 25Q 50Q 50H 10H 10F 20F | HUNTER PROS-PRS30-06-MSBN MULTI-STREAMER BUBBLER, 6IN. POP-UP, 25=.25GPM, 50=0.5GPM, 10=1.0GPM, 20=2.0GPM. | 4 | 30 |

| SYMBOL | MANUFACTURER/MODEL/DESCRIPTION | QTY |
|---|---|---|
| | HUNTER ICV-G 1IN PLASTIC ELECTRIC REMOTE CONTROL VALVES, GLOBE CONFIGURATION, WITH NPT THREADED INLET/OUTLET, FOR COMMERCIAL/MUNICIPAL USE. | 1 |
| | LANDSCAPE PRODUCTS INC. BGV BRASS GATE VALVE, THREADED BONNET, NON-RISING STEM, PRESSURE RATED TO 200 PSI. SAME SIZE AS MAINLINE. | 2 |
| BF | FEBCO 825Y 1" REDUCED PRESSURE BACKFLOW PREVENTER | 1 |
| C | HUNTER NODE-100 SINGLE STATION CONTROLLER, OUTDOOR, BATTERY POWERED. DC LATCHING SOLENOID INCLUDED. | 1 |
| WS | HUNTER RAIN-CLIK RAIN SENSOR, WITH CONDUIT INSTALLATION, MOUNT AS NOTED. NORMALLY CLOSED SWITCH. | 1 |
| M | WATER METER 1-1/2" NETAFIM HYDROMETER MODEL# LHM15TG1-MEL | 1 |
| POC | POINT OF CONNECTION 1" EXISTING WATER VALVE MANIFOLD | 1 |
| | IRRIGATION LATERAL LINE: PVC SCHEDULE 40 | 89.8 L.F. |
| | IRRIGATION MAINLINE: PVC SCHEDULE 40 | 133.5 L.F. |
| | PIPE SLEEVE: PVC SCHEDULE 40 | 16.6 L.F. |

Valve Callout
- Valve Number
- Controller Letter
- Valve Flow
- Valve Size

## VALVE SCHEDULE

| NUMBER | MODEL | SIZE | TYPE | GPM | WIRE | PSI | PSI @ POC |
|---|---|---|---|---|---|---|---|
| 1 | HUNTER ICV-G | 1" | BUBBLER | 2 | 53.1 | 32.2 | 32.6 |

## IRRIGATION NOTES

1. THE SYSTEM HAS BEEN DESIGNED TO PROVIDE 100% COVERAGE. ANY CHANGES MADE IN THE LAYOUT DUE TO FIELD CONDITIONS SHALL BE IN ACCORDANCE WITH THESE STANDARDS. QUANTITIES IN SCHEDULE ARE ESTIMATED. PLAN SHALL TAKE PRECEDENCE.
2. ALL IRRIGATION LINES AND VALVES ARE SHOWN DIAGRAMMATICALLY. ALL LINES AND VALVES TO BE INSTALLED IN PLANTING AREAS WHERE POSSIBLE.
3. CONTRACTOR TO FIELD LOCATE ALL PROPOSED IRRIGATION WATER MAIN LINE LOCATIONS. CONTACT LANDSCAPE ARCHITECT PRIOR TO START OF WORK IF DISCREPANCIES BETWEEN THIS PLAN AND EXISTING CONDITIONS ARE FOUND.
4. LOCATE ALL VALVES INSIDE LANDSCAPE AREAS, ALLOWING ACCESS FOR MAINTENANCE PURPOSES, BUT HIDING THEM FROM PUBLIC VIEW WHENEVER POSSIBLE.
5. ALL PRESSURE MAINLINES UNDER ASPHALT PAVEMENT SHALL BE PLACED WITHIN SLEEVES AS NOTED. WHERE ELECTRIC VALVE CONTROL LINES PASS THROUGH A SLEEVE WITH OTHER MAIN OR LATERAL LINES THEY SHALL BE CONTAINED WITHIN A SEPARATE, SMALLER CONDUIT.
6. CONTRACTOR SHALL PROVIDE "AS-BUILT" DRAWINGS OF THE FINAL INSTALLATION TO OWNER AT SUBSTANTIAL COMPLETION BEFORE RECEIVING FINAL PAYMENT.
7. ALL SLEEVES UTILIZED BY THE IRRIGATION CONTRACTOR, WHETHER INSTALLED BY HIM OR NOT, SHALL BE LOCATED ON THE "AS-BUILT" DRAWINGS. THE DEPTH BELOW FINISH GRADE, TO THE NEAREST FOOT OF EACH END OF EACH SLEEVE SHALL BE NOTED AT EACH SLEEVE LOCATION ON THE "AS-BUILT" DRAWINGS. ALL SLEEVES SHALL BE SIZED TWO PIPE SIZES GREATER THAN PIPE IT CARRIES.
8. ALL DRIP ZONES SHALL BE INSTALLED WITH A SELF-FLUSHING DISC FILTER, OR APPROVED EQUAL
9. IRRIGATION CONTRACTOR SHALL SECURE ANY AND ALL NECESSARY PERMITS FOR THE WORK PRIOR TO COMMENCEMENT OF HIS OPERATIONS ON-SITE. COPIES OF THE PERMITS SHALL BE SENT TO THE OWNER/GENERAL CONTRACTOR. WORK IN THE R.O.W. SHALL CONFORM TO THE STANDARDS AND SPECIFICATIONS OF LOCAL AND/OR STATE HIGHWAY JURISDICTION.
10. VERIFY CONTROLLER AND RAIN SENSOR LOCATION AND MAINLINE POINT OF CONNECTION AT PROJECT SITE WITH OWNER.
11. ELECTRIC SERVICE TO CONTROLLER SHALL BE PROVIDED BY THE GENERAL CONTRACTOR.
12. ALL 24 VAC WIRING SHALL BE OF DIRECT BURIAL COPPER WIRE AS FOLLOWS:
    - CONTROL WIRES - #14
    - COMMON WIRES - #12
13. INSTALLATION OF WORK SHALL BE COORDINATED WITH OTHER CONTRACTORS IN SUCH A MANNER AS TO ALLOW FOR A SPEEDY AND ORDERLY COMPLETION OF ALL WORK ON THE SITE.
14. COORDINATE WITH PLANTING PLAN FOR PLANTER BED LOCATIONS AND TREE LOCATIONS.
15. CONTRACTOR SHALL COORDINATE WITH DEVELOPER FOR OPERATING PARAMETERS OF MASTER SYSTEM. THIS DESIGN REQUIRES 45 PSI TO OPERATE. IF THE MASTER SYSTEM CANNOT PROVIDE THESE PARAMETERS, CONTRACTOR SHALL MAKE ADJUSTMENTS TO THE DESIGN BY ADDING CONTROL VALVES, A BOOSTER PUMP, PRESSURE REDUCING VALVE, OR OTHER EQUIPMENT, AS NECESSARY. CONTRACTOR SHALL SUBMIT DESIGN REVISIONS TO OWNER'S REPRESENTATIVE FOR APPROVAL PRIOR TO SUBMITTING BID.
16.
17. A FINAL REPORT FOR THE TESTING AND ADJUSTING OF ALL NEW SYSTEMS SHALL BE COMPLETED PRIOR TO FINAL APPROVAL BY THE FIELD INSPECTOR. THIS REPORT SHALL BE SIGNED BY THE INDIVIDUAL RESPONSIBLE FOR PERFORMING THESES SERVICES.
18. A LAMINATED DIAGRAM OF THE IRRIGATION PLAN SHOWING HYDROZONES SHALL BE KEPT WITH THE IRRIGATION CONTROLLER FOR SUBSEQUENT MANAGEMENT PURPOSES.
19. A CERTIFICATE OF COMPLETION SHALL BE FILLED OUT AND CERTIFIED BY EITHER THE SIGNER OF THE LANDSCAPE PLANS, THE SIGNER OF THE IRRIGATION PLANS, OR THE LICENSED LANDSCAPE CONTRACTOR FOR THE PROJECT.
20. AN IRRIGATION AUDIT REPORT SHALL BE COMPLETED AT THE TIME OF FINAL INSPECTION.

I HAVE COMPLIED WITH THE CRITERIA OF THE WATER EFFICIENT LANDSCAPE ORDINANCE AND APPLIED THEM FOR THE EFFICIENT USE OF WATER IN THE LANDSCAPE AND IRRIGATION DESIGN PLAN.

MICHAEL P. MADSEN, LLA 5798

## IRRIGATION MAINTENANCE SCHEDULE

THE IRRIGATION MAINTENANCE SCHEDULE TASKS LISTED BELOW ARE INTENDED A S MINIMUM STANDARDS AND MORE FREQUENT ATTENTION MAY BE REQUIRED DEPENDING ON THE PARTICULAR SITE CONDITIONS. MAINTENANCE SHALL BE DONE TO ENSURE WATER EFFICIENCY. REPAIR OF IRRIGATION EQUIPMENT SHALL BE DONE WITH THE ORIGINALLY SPECIFIED MATERIALS OR APPROVED EQUIVALENTS.

FREQUENCY - QUARTERLY

TASK - CONTROLLER CABINET : OPEN CABINET AND CLEAN OUT DEBRIS AND REPLACE BATTERY AS NECESSARY.CHECK WIRING AND REPAIR AS NEEDED AND CHECK CLOCK AND RESET IF NECESSARY.

FREQUENCY - MONTHLY

TASK - IRRIGATION SCHEDULE: ADJUST SCHEDULE FOR SEASONAL VARIATIONS AND OTHER CONDITIONS WHICH MAY AFFECT THE AMOUNT OF WATER NEEDED TO MAINTAIN PLANT HEALTH. ADJUST AS NECESSARY.

FREQUENCY - QUARTERLY

TASK - POC: VISUALLY INSPECT COMPONENTS FOR LEAKS, PRESSURE SETTINGS, SETTLEMENT OR OTHER DAMAGE AFFECTING THE OPERATION OF A COMPONENT. REPAIR AS NEEDED.

FREQUENCY - QUARTERLY

TASK - REMOTE CONTROL VALVES : ISOLATION VALVES AND QUICK COUPLER VALVES: VISUALLY INSPECT FOR LEAKS, SETTLEMENTS, WIRE CONNECTIONS AND PRESSURE SETTINGS. REPAIR AS NEEDED.

FREQUENCY - QUARTERLY

TASK - MAINLINE AND LATERALS: VISUALLY INSPECT FOR LEAKS OR SETTLEMENTS OF TRENCH.

FREQUENCY - WEEKLY

TASK - FILTERS AND STRAINERS - VISUALLY CHECK FOR ANY BROKEN MALIGNED OR CLOGGED HEADS, HEADS WITH INCORRECT ARC, INADEQUATE COVERAGE OR OVERSPRAY AND LOW HEAD DRAINAGE, REPAIR AS NEEDED.

FREQUENCY - MONTHLY

TASK - FILTERS AND STRAINERS: VISUALLY CHECK FOR LEAKS, BROKEN FITTINGS, CLEAN AND FLUSH SCREENS.

## STATE OF CALIFORNIA ESTIMATED WATER USE

TOTAL WATER USE IS CALCULATED BY SUMMING THE AMOUNT OF WATER ESTIMATED FOR EACH HYDROZONE. WATER USE FOR EACH HYDROZONE IS ESTIMATED WITH THE FOLLOWING FORMULA:

EWU (HYDROZONE) = ESTIMATED WATER USE (GAL / YEAR)
ETO = REFERENCE EVAPOTRANSPIRATION (INCHES / YEAR)
PF = PLANT ETO ADJUSTMENT FACTOR
HA = HYDROZONE AREA (S.F.)
.62 = CONVERSION FACTOR
IE = IRRIGATION EFFICIENCY
SLA = SPECIAL LANDSCAPE AREA (S.F.)

EWU (HYRDROZONE) = (ETO * PF * HA * .62) / (IE)

### HYDROZONE B (LOW WATER BUBBLER)

| ETO | PF | HA | IE | CONVERSION FACTOR | EWU GAL/YEAR |
|---|---|---|---|---|---|
| 43.8 | .2 | 64 | .81 | .62 | 429 |
| ESTIMATED TOTAL WATER USE (ETWU) | | | | | 429 |

### MAWA (MAXIMUM APPLIED WATER ALLOWANCE)

| ETO | ET ADJUSTMENT FACTOR | TOTAL HA | CONVERSION FACTOR | MAWA |
|---|---|---|---|---|
| 43.8 | .45 | 64 | .62 | 782 |
| ESTIMATED ANNUAL WATER USE (% OF MAWA) | | | | 55 |

APPLICANT:

The new at&t

1452 EDINGER AVENUE,
3RD FLOOR
TUSTIN, CA 92780

ENGINEER:

Eukon
an SFC Communications, Inc. Company
65 POST, SUITE 1000
IRVINE, CA 92618
TEL: (949) 553-8566
www.eukongroup.com



DRAWN BY: MG
CHECKED BY: RB

REVISIONS:

| REV | DATE | DESCRIPTION |
|---|---|---|
| 0 | 03/27/23 | 100% CONSTRUCTION DRAWING |
| B | 03/09/23 | JURISDICTION COMMENTS |
| A | 01/12/23 | 90% CONSTRUCTION DRAWING |

LICENSEE:

LANDSCAPE ARCHITECT
MICHAEL P. MADSEN
No. 5798
8/31/2023
REGISTERED PROFESSIONAL ENGINEER
4/18/2023
CALIFORNIA

PROJECT INFORMATION:

CLL05599

1765 HILLFAIR DR.
GLENDALE, CA 91208

SHEET TITLE:

IRRIGATION SCHEDULES & NOTES

SHEET NUMBER:

L-4

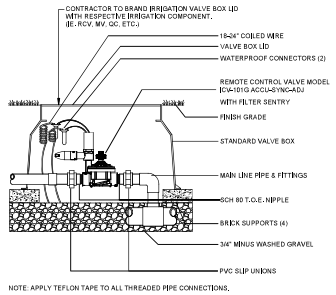


1 IVC GLOBE VALVE

N.T.S.

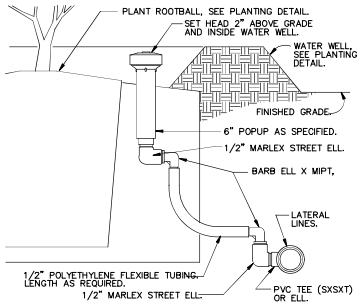


2 POPUP BUBBLER AT PLANT PIT

NTS

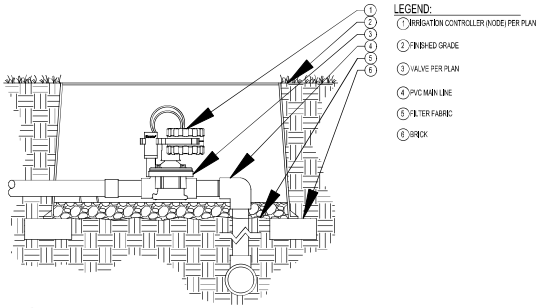


3 NODE ON VALVE

NTS

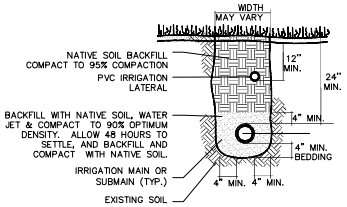


4 TRENCHING DETAIL

N.T.S.

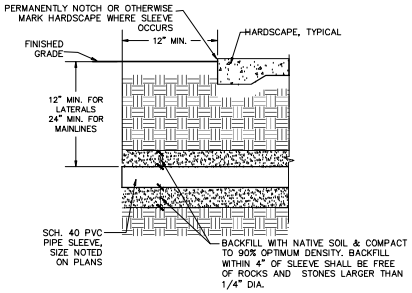


5 MAINLINE AND LATERAL PIPE SLEEVING

N.T.S.

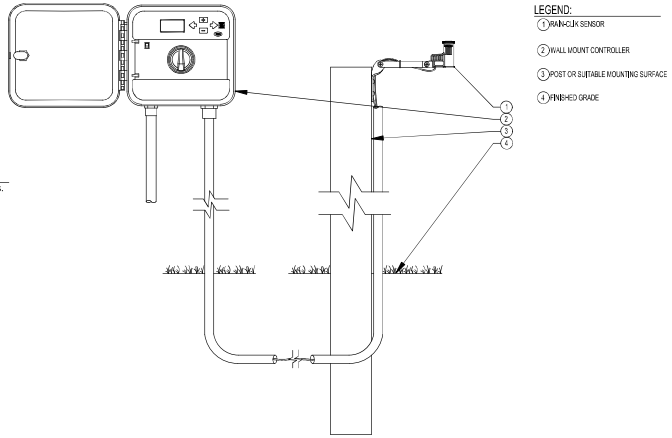


7 RAIN CLIK WITH GENERIC WALL-MOUNT CONTROLLER

N.T.S.

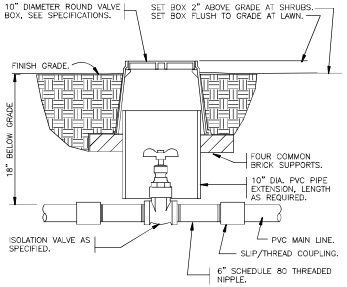


6 BRASS ISOLATION VALVE

1 1/2" = 1'-0"

FX-IR-FX-ISOV-01

APPLICANT:

The new at&t

1452 EDINGER AVENUE,
3RD FLOOR
TUSTIN, CA 92780

ENGINEER:

Eukon
an SFC Communications, Inc. Company
65 POST, SUITE 1000
IRVINE, CA 92618
TEL: (949) 553-8566
www.eukongroup.com



| | |
|---|---|
| DRAWN BY: | MG |
| CHECKED BY: | RB |

REVISIONS:

| REV | DATE | DESCRIPTION |
|---|---|---|
| 0 | 03/27/23 | 100% CONSTRUCTION DRAWING |
| B | 03/09/23 | JURISDICTION COMMENTS |
| A | 01/12/23 | 90% CONSTRUCTION DRAWING |

LICENSEE:

8/31/2023
4/18/2023

PROJECT INFORMATION:

CLL05599

1765 HILLFAIR DR.
GLENDALE, CA 91208

SHEET TITLE:

**IRRIGATION DETAILS**

SHEET NUMBER:

L-5

Part 1.00 General

1.01 SCOPE OF WORK
A. This Section shall govern the furnishing of all labor, materials and equipment for a complete operating system for irrigation as specified herein and shown on the applicable drawings.

1.02 SUBMITTALS
A. Material List: Submit list of all materials for irrigation system.
B. Maintenance Items: Provide the following:
1. Two sets of sprinkler wrenches for adjusting, cleaning or disassembling each type of sprinkler.
2. Two service manuals for all equipment installed. Manuals shall be loose leaf and show drawings or exploded views of equipment and catalog numbers and current prices.
3. Operating instructions for all equipment installed.
4. One set of quick coupling keys to operate the quick coupling valves.
C. Project Record Documents: Correct daily to indicate changes from Contract Documents.
1. Horizontally at 90 degree angles, dimension the location of the following items from two permanent points of reference: i.e, curb junctures, light standards, building corners, survey hub points, or coordinates with a tolerance of 12 inch maximum.
a. Sprinkler main lines routing.
b. Connections to the existing water supply lines.
c. Sprinkler control valves.
d. Gate valves.
e. Electrical control wire path diagrammatically.
2. Vertical dimensions shall be given for mains when site conditions require installation deeper than 24 inches.

1.03 PRODUCT HANDLING
A. Exercise care in handling, loading, unloading and storing irrigation system materials to avoid damage. Store under cover.

1.04 PRODUCT CONDITIONS
A. The Contractor shall make all temporary repairs as necessary to keep the irrigation system in operating condition. This exercise shall not affect the requirements to be performed under the Contract Documents.
B. Coordinate work with that of other trades, all underground improvements, the location and planting of specimen trees and all other planting. Location of all planting requiring excavations 24 inch in diameter and larger shall be verified with Owner prior to installation of main lines.

1.05 INSPECTION
A. Verify dimensions and grades at job site.

Part 2.00 Products

2.01 MATERIALS
A. Plastic pipe: Extruded from 100% Virgin Polyvinyl Chloride (PVC).
1. Plastic pipe installed on pressure side of valves: (PVC) ASTM D1785, Schedule 40.
2. Plastic pipe installed on non-pressure side of valves: (PVC) ASTM D2241 Class 160.
B. Plastic fittings: (PVC) ASTM D1785, Type 2, IPS, Schedule 40, NSF.
C. Solvent & Cleaner: As recommended by pipe manufacturer.
D. Automatic Controller: Refer to Drawings.
E. Sprinkler Heads: Refer to Drawings.
F. Wire: Copper, UL approved direct burial wire. Minimum of 14 gauge or as specified on the drawings.
G. Remote Control Valve Boxes: Brooks #3 or Ametek VP-10, Box lids shall be marked "R.C.V.".
1. Valve boxes for gate valves 3" and smaller: Ametek.
2. Gate valve boxes shall be marked 'Irrigation' or 'Water'.
H. Conduit for Control Wires (if shown on drawings): (PVC) ASTM D1785, Schedule 40 in locations as indicated.
I. Miscellaneous Materials: As hereinafter specified and as necessary to complete this work and as shown on Drawings.

Part 3.00 Execution

3.01 EXCAVATION AND BACKFILLING
A. Trenching - General:
1. Dig trenches straight.
2. Provide continuous support of the pipe by the bottom of trench. Lay pipe to even grade. Bottom of trench shall be free from rocks or other sharp edge objects.
3. Trenching shall follow layout indicated.
4. Minimum cover: Pressure Lines: 24 inches.
Non-Pressure Lines: 12 inches.
5. All lines shall have a 6" minimum clearance from each other and from lines of other crafts. Do not install lines directly over another line.
6. Maintain 1' minimum between lines which cross at angles of 45 degrees to 90 degrees.
7. Exercise care in excavating, trenching and working near existing utilities.
B. Backfilling:
1. Compact to dry density equal to adjacent undisturbed soils.
2. Conform to adjacent grades without dips, sunken areas, humps or other irregularities.
3. Initial backfill on plastic lines shall be pulverized native soil no larger than 2" in diameter and free of foreign matter.
4. Restore grades and repair damage where settling occurs.
C. Routing of Piping:
1. Pressure and non-pressure piping lines are routed diagrammatically on Drawings.
2. Coordinate specimen trees and shrubs with routing of lines. Planting shall take precedence over sprinkler and piping location. Report any major deviation from routing indicated to landscape architect or owner prior to line installation.
3. Install lines in such manner as to conform with drawings without offsetting the various assemblies from the pressure supply line.

3.02 INSTALLATION
A. Water Supply: Refer to drawings.
B. Quick coupling valves: Installed at intervals so that not more than 150 feet of hose will be required to reach any plant or tree (if a pressurized main system is being used).
C. Assemblies:
1. No multiple assemblies shall be installed on pressure lines.
2. Provide each assembly with its own outlet.
D. Cathodic Protection: Provide in the piping systems where required by installing insulating couplings, flanges or unions between copper or brass pipe or tubing and steel or cast iron pipe.
E. Plastic Pipe: Install plastic pipe in accord with manufacturer's recommendations. Install sprinkler head on plastic pipe as indicated.
1. All welded joints shall be cleaned with manufacturer's cleaner prior to applying solvent.
a. Welded joints shall be given at least 15 minutes set-up curing time before moving or handling.
b. Pipe shall be partially center loaded to prevent arching and shifting under pressure.
c. No water shall be permitted in pipe until a period of at least four hours has elapsed for solvent weld setting or curing or as required by solvent manufacturer.
2. Backfilling shall be done when pipe is not in expanded condition due to heat.
Cooling of pipe can be accomplished by operating the system for a short time before backfill, or by backfilling in the early part of the morning before the heat of the day.
3. Curing: When the temperature is above 60 F, solvent weld joints shall be given at least 24 hours curing time before water is introduced under pressure.
F. Automatic Controller:
1. Contractor shall be responsible for making control wire and electric power connections to the automatic controller.
G. Remote Control Valves:
1. Install at sufficient depth to provide not more than 6" not less than 4" cover from the top of the valve to finish grade.
2. Install valves in a plumb position with 24" minimum clearance from other equipment for proper maintenance.
3. All valves shall be installed in appropriate sized valve boxes with cover.
H. Wire Connections: All underground wire connections to electric remote control valves shall be made by using waterproof wire connectors as manufactured by King Technology Inc.
I. Gate Valves:
1. Line size and install where indicated and sufficient clearance from other materials for proper maintenance.
2. Equip valves, sizes 3" and smaller, with standard operating wheel for operation. Valve bonnet packing shall be checked and tightened before backfill. All valves shall be 150 psi rated.
3. All valves shall be installed in appropriate sized valve boxes with cover.
J. Drip Irrigation:
1. Provide drip irrigation in all sidewalk planters, parking field islands, and other non-turf areas shown on plans to mitigate water and energy usage for environmental purposes.
2. Drip Irrigation must be:
a. Self-flushing
b. Pressure Compensating
c. Root Deterrent
d. Equipped with appropriate filtration device
e. Stapled down to prevent movement according to the manufacturer's guide.
K. Thrust Blocks: Install thrust blocks on all main irrigation lines 4" or larger at all changes of direction, as detailed in manufacturer's recommendations on pipe installation or as shown on the drawings.
L. Flushing of System:
1. Flush main and lateral systems to clean out all debris and sediment prior to installation of heads.
2. This does not relieve requirements of future adjustments of system or re-flushing system.

3.03 ELECTRICAL
A. Be responsible for making wire connections from remote control valves to controllers. All wiring shall be in accord with applicable codes.

3.04 PRESSURE TEST
A. Test all pressure lines under hydrostatic pressure of 100 lbs. per square inch, 150 lbs. per square inch for mainline, and all non-pressure lines shall be tested under the existing static pressure and both be proven watertight.
B. Pressure shall be sustained in the lines for not less than four hours. If leaks develop, the joints shall be replaced and the test repeated until the entire system is proven watertight.
C. Perform tests prior to backfill.

3.05 ADJUST AND CLEAN
A. Installations and Operations: Make such adjustments and repairs as requested as necessary for acceptance at no additional cost to the owner.

3.06 COMPLETE AND ACCEPTANCE
A. Completion of work shall mean the full and exact compliance and conformity with provisions expressed or implied in the drawings and specifications.
B. All work under this contract shall not be finally accepted until expiration of the guarantee period.
C. The irrigation contractor shall demonstrate and fully acquaint the owner and/or owner's representative with the entire system, proving that all remote control valves are properly balanced, that all heads are properly adjusted for radius and arc of coverage, and that the system is workable, clean and efficient, and that the controller has been programmed and is operational. This shall be a requirement for acceptance of the work.
D. Contractor shall upon receipt for final payment, give owner a set on CD of as-built irrigation system with all valves, tees and heads indicated as installed.

3.07 GUARANTEE AND REPLACEMENT
A. The irrigation contractor shall furnish warranties in writing certifying that the quality and workmanship of all materials and installation furnished is in accordance with these specifications and in accordance with original manufacturer's warranties. Irrigation contractor shall further see to the fulfillment of all manufacturer's warranties. Irrigation contractor shall warrant the installation workmanship for a period of one (1) year from date of completion or acceptance of the job, or any accepted portion of the job.
B. Should the irrigation contractor be notified that work or replacements are warranted under these conditions, he shall provide the required service and/or replacements promptly within three (3) days.

END OF SECTION

SECTION 02800
LANDSCAPE

Part 1.00 General

1.01 SCOPE OF WORK
A. This section covers furnishing and installing all landscape plants and nonplant materials covered by the drawings and these specifications. The work shall include materials, labor, equipment and services as described herein and indicated on the drawings. Also, the work shall include the maintenance of all plants and planting areas until acceptance by the Owner, and the fulfillment of all guarantee provisions as herein specified.

1.02 PLANTING LAYOUT
A. Before beginning work, the contractor shall investigate and verify, in the field, the existence and location of all underground utilities and irrigation piping, and take precautions to prevent their disturbance. It shall be the responsibility of the contractor to obtain all such information as it is made available. Plans and specifications of related work may be obtained from the owner.
B. The contractor shall locate all general reference points, take precautions to prevent their disturbance, perform the layout work, be responsible for all lines, elevations and measurements of work executed under the contract, exercise proper precaution to verify figures on drawings before laying out work and be responsible for any error resulting from failure to exercise such precaution. The contractor shall make field measurements for his own work and be responsible for its accuracy.
C. Discrepancies between conditions existing on the site and conditions indicated on the drawings shall be called to the attention of the owner before or at the time plant locations are staked out.
D. In the event of a variation between the plant list and the actual number of plants shown on the plans, the plans shall control.

1.03 HORTICULTURAL STANDARDS
A. Unless otherwise noted, plant material, including collected materials, shall be grade No. 1 or better as outlined under Grades and Standards for Nursery Plants, and shall also conform to American Standard for Nursery Stock, ANSI (American National Standards Institute, Inc.) Z60.1-1996 as approved by the American Association of Nurserymen.
B. All plant names shall conform to the names given in Standardized Plant Names, 1942 Edition, prepared by the American Joint Committee on Horticultural Nomenclature. Names of varieties not included therein shall conform generally with names accepted in the nursery trade. All plant materials shall be true to botanical, common and variety names. Botanical name shall have precedence over common name.
C. The landscape architect shall have the right, at any stage of the operations, to reject any and all work and materials which, in his opinion, do not meet with the requirements of these specifications. Such rejected material shall be removed from the site and acceptable material substituted in its place.

1.04 CERTIFICATES OF INSPECTION
A. All plant material shall be inspected by the Department of Agriculture, as required by state law. Plants of a grade less than that specified in the article HORTICULTURE STANDARDS will not be accepted.

Part 2.00 Non-Plant Materials

2.01 SOIL BACKFILL
A. Soil for backfilling planting areas and plant pits shall be the existing surface soil, free from subsoil, objectionable weeds, litter, sods, stiff clay, stones, stumps, roots, trash, toxic substances, mortar, cement or any other material which may be harmful to plant growth or hinder planting operations. Poorly drained soil shall not be used.
B. After rough grading and prior to top soil installation, the contractor shall obtain current agronomic soils report, send to the Landscape Architect for review and include soil amendment recommendations on these plans.
C. Soil amendments shall be added to the soil in the amount and manner prescribed by soil analysis to obtain a pH of 5.5 to 6.5. Results from soil analysis and a list of the prescribed amendments shall be presented to the owner and verified by the landscape architect prior to being incorporated into the soil.
D. If additional soil is required it shall be furnished by the contractor and shall be a natural, friable soil representative of productive, well-drained soils in the vicinity. It shall be obtained from well drained areas which have never been stripped before + and shall be free of admixture of subsoil and foreign matter, stones, toxic substances and any material or substance that may be harmful to plant growth.
E. The contractor shall provide the following information on imported topsoil:
1. Specific location from which topsoil will be (or was) stripped.
2. Present owner of that property.
3. Approximate amount of topsoil available.
4. Test results showing topsoil composition and analysis.
F. Soil test shall be performed by a qualified soils laboratory, in accordance with "Methods of Soils Analysis - Agronomy 9" as published by the American Society of Agronomy and shall be performed at the Contractor's expense.
G. Planting soil backfill for raised architectural planters, if applicable, shall consist of 40% potting soil, 40% coarse washed builders sand and 20% horticultural perlite.
H. Areas designated to be planted with flowering annuals, if applicable, shall be excavated to a depth of 8? and backfilled with a mixture consisting of 40% peat, 40% D.C.T. (coarse) sand, 10% pine bark (decomposed) and 10% coarse chips.
I. Planting soil backfill for tree wells, if applicable, shall be 2/3 approved topsoil and 1/3 coarse washed builder's sand.

2.02 FERTILIZER
A. Commercial fertilizer shall be 14-14-14 formulation of Osmocote brand, 5-6 month release of which 60% of the nitrogen is in urea-formaldehyde form and shall conform to the applicable state fertilizer laws. Fertilizer shall be uniform in composition, dry and free flowing.

2.03 PRE-EMERGENCE WEED CONTROL
A. Weed control shall be Ronstar 2G as manufactured by Rhodia, Inc., Monmouth Junction, New Jersey 08852 or Princep (Simazine) as manufactured by Geigy Agricultural Chemicals, Ardsley, New York 10502, or an approved equal.

2.04 WATER
A. Water will be available for use on site during the landscape installation at no cost to the contractor. Care shall be exercised to assure that water is kept free of harmful chemicals, acids, alkalis, or any substance, which might be harmful to plant growth.

2.05 ANTIDESICCANT
A. Antidesiccant shall be an emulsion type; film-forming agent designed to permit transpiration, but retard excessive loss of moisture from plants, such as Cloverlay Co., or Wilt-Pruf by Nursery Specialty Products, Inc., or an acceptable equal. The antidesiccant shall be delivered in the manufacturer's fully identified containers and shall be mixed in accordance with manufacturer's instructions.

2.06 BORICIDE
A. Boricide shall be Lindane as manufactured by Pfatt, or an approved equal.

2.07 MULCH
A. Wood Bark Mulch shall be premium organic, natural, non-stained 3" or less in length and be dean-free of leaves, rubbish and debris.

2.08 GUYING AND STAKING MATERIAL
A. Stakes for supporting trees shall be as detailed on the drawings. Wire for fastening trees to duckbill and turnbuckle shall be galvanized aircraft grade guying cable as specified in the detail. Wires in contact with trees shall be encased in two-ply reinforced garden hose. Material for wrapping tree trunks shall be burlap, heavy crepe paper, or other acceptable material in strips 6 to 10 inches wide.

2.09 DRAINAGE GRAVEL
A. Where indicated on the drawings, or where soil conditions deem it necessary, the contractor shall install gravel subdrains beneath trees and/or planting areas to aid in soil drainage and percolation. The subdrain shall be constructed as detailed on the drawings, or as directed by the landscape architect. Drainage gravel shall consist of washed, clean gravel 3/4 inch to 2 inches in size.

2.10 SOIL SEPARATION MATS
A. Soil separation mats, if indicated on the drawings, shall be Biderm (gray felt) as manufactured by Monsanto Co., 800 North Lindbergh Road, St. Louis, MO 63166 or approved equal. Mats shall be installed as indicated on the drawings, and edges overlapped a minimum of 4 inches. Care shall be taken to prevent tearing or excessive crushing during the installation process.

Part 3.00 Plant Material

3.01 QUALITY OF PLANT MATERIAL
A. During inspection, as set forth hereinafter, all plant material will be judged, and rejections shall be based upon these standards. All plants shall comply with federal and state requiring inspection for plant diseases and infestations. Inspection certificates required by law shall be made available to the owner or owner's representative at his/her request.
B. In determining the quality of plant material, the following elements will be valued:
1. Root condition.
2. Plant size (above ground).
3. Insect and disease free condition.
4. General appearance (color, shape, pruning).
A deficiency in one or more of these areas will be sufficient reason to reject selectively or by lot.
C. The landscape architect shall have the right, at any stage of the operations, to reject any and all work and materials which, in his opinion, do not meet with the requirements of these specifications. Such rejected material shall be removed from the site and acceptable material substituted in its place.

3.02 SIZE AND MEASUREMENTS
A. Plants shall be measured when branches are in their normal position. Heights and spread dimensions specified refer to the main body of the plant and not to extreme branch tip to tip. The measurements specified are the minimum size acceptable and where pruning is required, these are measurements after pruning. When sizes are indicated as a range, the plant shall have the proper proportion as outlined in Department of Agriculture, Grades and Standards for Nursery Plants Part 1 and 11. Caliper of trees shall be taken 36 inches above the ground level and shall be the determining measurement for trees.
B. Plants, which have been headed back to conform to the size specified, will not be acceptable. Plants larger than specified may be used if approved by the owner; however, the use of such plants shall not increase the contract price.

3.03 LABEL
A. Plant materials shall have durable, legible labels stating, in weather resistant ink, the correct botanical and common names and size as indicated in the Plant List. Each plant, or sufficient representative samples of each delivered shipment, shall have labels securely attached in a fashion that will not interfere with normal plant growth. Plant materials which have (or will have) a seasonal bloom shall be tagged with labels indicating the specific variety of that species' botanical and common name.

3.04 COLLECTED PLANTS
A. All plant material shall be nursery grown. Collected plants shall have been grown under climatic conditions similar to those in the locality of the project. All collected plants shall meet the requirements as specified and shall meet all specified grades and standards, unless otherwise qualified in the Plant List or these specifications. Root balls shall be increased in size one third greater than nursery grown plants.

3.05 CONTAINERIZED PLANTS
A. All container grown plants shall be well rooted and established in the container in which they are delivered to the site. The plants shall have been in that container sufficiently long for the fibrous roots to hold the soil together when the plant is removed from the container. Container grown plants found to be root-bound during planting will not be acceptable. Containerized trees have a tendency to dry out quickly. The contractor shall be responsible for hand watering the trees at time of delivery through the time of final acceptance at a rate consistent with the nursery watering schedule to assure that the tree does not go into shock.

3.06 SPECIMEN PLANTS
A. After receiving the Notice to Proceed, the contractor shall locate all plants specified as specimen. The contractor shall notify the owner so they may agree on a time to mutually inspect the selected plants. The owner will inspect and tag those plants, which are acceptable for use. Expenses incurred by the owner for any subsequent inspection of specimen plants, at any time, in addition to the mutually agreed time shall be the responsibility of the contractor.

3.07 SUBSTITUTIONS
A. The use of materials differing in kind, quality or size from those specified will be allowed only after the owner is convinced that all means of obtaining the specified materials have been exhausted.
B. Where it is indicated that the contractor may furnish or use a substitute that is equal to the material or equipment specified and if the contractor is to furnish or use a proposed substitute, he shall, after the award of the contract, make written application to the owner for acceptance of such a substitute. The substituted product or method shall be equal or superior in all respects to the specified product or method, shall perform adequately the duties imposed by the general design, shall be compatible with all other elements of the job, and shall be sufficient to complete the job. The substitution shall not add cost to the contract. Should it be necessary to accept a substitute of a quality less than specified, the unit price shall be used to adjust the contract price downward accordingly. No substitution shall be ordered or installed without the written permission of the owner and governing municipality.

Part 4.00 Delivery, Storage and Handling

4.01 PLANT MATERIAL
A. The contractor shall exercise care in handling, loading and unloading, storage and transporting all plant material and allied materials to prevent damage. The contractor shall assume full responsibility for protection and safekeeping of products stored on the job.
B. The contractor shall dig and prepare plant material for shipment in a manner that will not damage roots, branches, shape and future development after planting.
C. Trees indicated on the plans where size, soil conditions and distance of transport to the site would warrant, shall be wireballed. Bottom wired baskets manufactured specifically for use in tree handling may be used.
D. The contractor shall handle all plants so that roots and branches are protected at all times from drying out, heating and from other injury. All plants shall be handled by the ball or container.
E. Before moving plants from the nursery or storage area to the site; they shall be thoroughly sprayed with a solution of antidesiccant. Antidesiccant shall be applied to all collected pines, oaks and myrtles. Two weeks after planting or re-specifying the product conditions, the material shall be sprayed again with the antidesiccant. The antidesiccant shall be applied using power spray to provide an adequate film over trunks, branches, stems, twigs and foliage.
F. When transporting plants to and at the site, the contractor shall make provisions to protect plants from wind damage by avoiding high-speed highways, transporting in enclosed or partially enclosed vehicles, or covering the plants with burlap or other suitable material. Plants severely damaged by wind will be rejected.
G. Any plant with signs of insects, their eggs or larvae or disease will be rejected and shall be removed from the project site.
H. Only the nursery stock intended for planting on a particular day shall be delivered and stored on the site during the day unless otherwise acceptable to the owner. All plants shall be stored in one location as designated by the owner, protected from wind and kept moist. The roots of all plants that cannot be planted immediately in soil shall be covered with mulch and other suitable material. No plants shall be taken from the temporary storage area for planting on the project until after the tree pits or holes for the plants in the section to be planted have been properly excavated and prepared ready to receive the trees and shrubs.
I. Trees moved by winch or crane shall be thoroughly protected from chain marks, girdling or other bark slippage by means of burlap, wood battens or other acceptable method.

4.02 NONPLANT MATERIAL
A. Fertilizer shall be delivered to the site in original, unopened containers bearing manufacturer's guaranteed chemical analysis, name, trade name, trademark and conformance to state law. In lieu of containers and provided that it is to be applied at the time of delivery, fertilizer may be furnished in bulk and a certificate indicating the above information shall accompany each delivery.
B. Pesticide and herbicide materials shall be delivered to the site in the original, unopened containers. Containers that do not have a legible label that identifies the Environmental Protection Agency registration number and the manufacturer's registered uses will be rejected.
C. Storage of materials shall be in the area designated for use by the owner. All materials shall be kept in dry storage and away from contaminants.

Part 5.00 Installation

5.01 PREPARATION BEFORE PLANTING
A. The contractor shall verify that all final grades have been established prior to beginning planting operations. All unsatisfactory grades shall be reported to the owner, and the contractor shall not proceed with this work until the unsatisfactory conditions have been corrected. When conditions detrimental to plant growth are encountered, such as rubble, fill or adverse drainage conditions, the contractor shall notify the owner for directions.
B. Should undesirable existing vegetation be present on the site at the time of installation, the contractor shall prepare the site for planting by use of chemicals, when used as recommended by the manufacturer, and/or mechanical means acceptable to the owner. Care shall be exercised to avoid any misuse of chemicals, which would create detrimental residual conditions. Care must also be used not to alter final grades, which have been established or cause damage to previously established turf areas.

5.02 SITE PREPARATION
A. If required by the owner, all plant locations and the areas of all planting beds shall be staked out on the ground, for acceptance by the owner, before planting operations begin. The contractor shall stake the location of the center of each tree and paint the outline of each shrub and groundcover bed. The stakes shall be oriented in a vertical manner so that they can be viewed and read from one direction. The contractor shall give the owner notice 24 hours prior to the completion staking described herein.
B. The contractor shall verify the location of underground utilities, and irrigation heads and valves, and provide markers or other suitable protection, where necessary, to prevent damage.

5.03 EXCAVATION OF PLANTING AREAS
A. No tree or shrub pit shall be dug or prepared until their location is acceptable to the owner. Reasonable care shall be exercised to have pits dug and soil prepared prior to moving plants to respective locations for planting to ensure that they will not be unnecessarily exposed to drying elements or to physical damage.
B. Circular pits with vertical sides shall be excavated for all plants. The depth of all plant pits shall be enough to accommodate the ball or roots and the prepared soil in the bottom of the pit. Diameter of pits for trees shall be at least 1 foot greater than the diameter of the ball.
C. Plant beds and pits shall be tested for proper drainage by filling with water twice successive. Conditions permitting the retention of more than 6 inches of water in 1 hour shall be brought to the attention of the owner. A written proposal and cost estimate for correction of such conditions shall be submitted to the owner for acceptance, before proceeding with the work.
D. All tree pits curbed planting islands, tree wells, or in areas, in which the soil has been compacted to an undesirable density, shall be excavated to a depth at least two feet greater than the measured depth and diameter of the ball. The minimum depth and diameter of excavation shall be four feet. Soil backfill in areas of density compacted soil must meet specification 201-C unsuitable soil on an approved location.
E. In shrub and groundcover beds where soils have been compacted to a density, which is detrimental to plant growth, the contractor shall loosen soils to a depth of 18" minimum to allow root penetration beyond the planting pit.
F. If acceptable for use, existing topsoil in shrub and groundcover beds shall be treated with the specified soil amendments, at rates determined by soil tests. Amendments shall be incorporated into the soil to a depth of 12 inches. Where soil is not acceptable as determined by soil tests, the soil in the entire area shall be removed to a depth of 8 inches and replaced with the specified planting soil.

5.04 PLANTING
A. All plants, except as otherwise specified, shall be centered in their pits, faced for best effect and set plumb for backfilling.
B. All synthetic strings, straps, and wire cages shall be removed from the top of third of the root ball. Synthetic burlap shall be removed completely. Plants shall be removed from cans by cutting two sides of a container with an acceptable can cutter. Sides shall not be cut with a spade. Sides of knockout cans shall not be cut. Plastic containers with slanted sides shall not require cutting. Plants shall be removed from the container carefully, without injury or damage to the plant and root system.
D. Bottom of plant boxes shall be removed before planting. Sides of the box shall be removed, without damage to the root ball, after positioning the plant and partially backfilling around it. The contractor shall hand water-containerized trees from the time of delivery until the time of the final acceptance at a rate consistent with the nursery conditions from which the trees were obtained. Trees, which go into shock due to insufficient water, may be rejected.
E. Plants shall be set in the center of the pits and shall be plumb and straight and at such a level that after settlement the root crown will be level with the surrounding grade.
F. Plant holes shall be backfilled with the specified planting mixture placed in layers around the roots or ball. Each layer shall be carefully tamped in place in manner to avoid injury to the roots or ball or disturbing the position of the plant. When approximately two thirds of the plant hole has been backfilled, the hole shall be filled with water and the soil allowed to settle around the roots. Balled and burlapped plants shall have the burlap cut away or folded back from the top of the ball before applying water. After the water has been absorbed, the plant hole shall be filled and tamped lightly to grade. Any subsequent settlement shall be brought to grade.
G. Immediately after each tree pit is backfilled, a shallow basin slightly larger than the pit shall be formed with a ridge of topsoil to facilitate watering. This soil saucer shall be formed in a circle and tamped around each tree so that the saucer will retain water. Where curbing occurs around plant pits, the saucer shall be omitted.
H. The contractor shall include adding a water retentive additive Terra-Sorb AG for all shrubs, groundcovers, annuals and trees at the manufacturers suggested rates.
DFPA Plywin, Exterior B-B, edge sealed.
1. Plastic Fiber:
Special forms of molded fiber, if required.
2. Cardboard:
Beam void forms "VOIDCO" or equal, as required under pier supported grade beams.
3. Metal:
Commercial standard, or as noted on drawings.

5.05 FERTILIZING
A. Each tree and shrub shall be fertilized by placing the manufacturer's recommended amount around the base of the ball before backfilling.

5.06 STAKING, GUYING AND WRAPPING
A. Staking or guying and wrapping of trees shall be done immediately after they are planted. Each plant shall stand plumb after staking or guying has been completed. It shall be the Contractor's responsibility to ensure that all trees are plumb and secure after planting. Staking of trees of a 10 foot height or less shall be at the discretion of the Owner. All other trees shall be staked.

5.07 MULCHING
A. Immediately after planting operations are completed, all tree and shrub saucers, and shrub and groundcover beds shall be covered with a 3 inch layer of wood bark mulch. 3 inch depth shall be provided throughout all landscape beds as indicated on the drawings. Limits of the mulch shall be as indicated on the drawings.

5.08 PRUNING
A. Each tree and shrub shall be pruned in accordance with standard horticultural practice to preserve the natural character of the plant and in the manner fitting its use in the landscape design. Pruning shall be done with clean, sharp tools and as indicated on the drawings.
B. Approximately one third of the growth of large deciduous trees (those with 2 inch caliper or larger) shall be pruned by removal of superfluous branches. Main leaders of trees shall not be cut back. Branches shall be thinned out and not merely cut back. Long side branches may be shortened. Shrubbery with extremely heavy tops shall have one fourth to one third of the weaker growth removed by thinning.

5.09 CLEANUP
A. During the course of planting, excess and waste materials shall be continuously and promptly removed daily. Lawns kept clear, and all reasonable precautions taken to avoid damage to existing structures, plants and grass. After completion of the work, the entire site shall be cleared of excess soils, waste material, debris and all objects that may hinder maintenance and affect the visual appearance of the site. The Contractor shall clean all roads and walks of dirt film and soil doors. The Contractor shall use pressure clean and broom sweep all asphalt pavement prior to the final lift of asphalt to be laid.

5.10 DISTURBED AREAS
A. All areas outside of the limits of work that are disturbed by the Contractor's construction activities shall be repaired and replanted to its original condition.

Part 6.00 Guarantees

6.01 GUARANTEED PROVING PERIOD
A. There shall be a guarantee period of 1 year for trees and specimen material and 1 year for shrubs. This guarantee period shall start at the final acceptance date. Contractor shall replace any and all plant material, which die during this guarantee proving period. Replacement of plants necessary during the guarantee period shall be the responsibility of the Contractor, except for possible replacements of plants resulting from removal, vandalism, acts of neglect on the part of others, or acts of God. All replacement material shall have the same guarantee time (1 year from installation of replacement for trees and specimen material and 1 year for shrubs).
B. Planting maintenance shall include all necessary watering, cultivation, weeding, pruning and spraying, wrapping and mulching, straightening of plants which lean or sag and which develop more than a normal amount of settlement such adjustments to include excavating around and leveling or raising the ball when so directed and all other incidental work necessary for proper maintenance as directed by the Owner until substantial completion and written release.
C. Transplanted material (if applicable) shall not be guaranteed, however, good horticultural practices should be used before, during and after the material is transplanted. Good horticultural practices should include but not be limited to, all necessary watering, pruning and spraying, wrapping and mulching, fertilizing, mowing, maintaining the same orientation and grade level from the original location, and all other incidental work necessary for proper transplanting.

6.02 FINAL INSPECTION AND ACCEPTANCE
A. The Contractor shall notify the Owner in writing when the work has been completed in accordance with this Contract and request an inspection. The Owner will make the inspection of the work and report findings as to acceptability and completeness. Any work remaining to be done shall be subject to reinspection before final acceptance. The Contractor will be notified in writing by the Owner of the final acceptance of the work.

6.03 CONTRACTOR'S RESPONSIBILITY AFTER ACCEPTANCE
A. The Owner may elect to assume maintenance of all work, at the time of acceptance, or may elect to contract for maintenance by others for a specified period. Should maintenance after final acceptance be the responsibility of those other than the Contractor, the Contractor shall monitor all work for which he is responsible by guarantee, to assure that maintenance being performed will not jeopardize the condition and quality of the work and materials guaranteed by the Contractor. Any inadequate or damaging maintenance practices shall be reported immediately in writing to the Owner so that appropriate measures may be taken to correct the condition. Failure to so notify the Owner will invalidate any later claim of negligence or malpractice in maintenance.

6.04 ACCEPTANCE AND REPLACEMENT OF PLANT MATERIAL
A. At the expiration of the proving period, an inspection of the plantings will be made by the Owner. Only those plants that are alive and normally healthy will be accepted. Unaccepted material shall be removed and replaced by the Contractor at his own expense, during the next planting season. Material and method of replacement planting shall be the same as specified for the original planting unless otherwise directed. The Contractor shall continue to make replacements until a plant shows vigorous and healthy growth for a period of 1 year from the date of acceptance by the Owner. All such replacements will be inspected for acceptance at the end of the proving period by the Owner.

6.05 REQUIRED MAINTENANCE
A. Landscape contractor shall be responsible for the maintenance and upkeep for 90 days past the final inspection.

END OF SECTION

APPLICANT:

The new at&t

1452 EDINGER AVENUE,
3RD FLOOR
TUSTIN, CA 92780

ENGINEER:

Eukon
an SFC Communications, Inc. Company
65 POST, SUITE 1000
IRVINE, CA 92618
TEL: (949) 553-8566
www.eukongroup.com



| | |
|---|---|
| DRAWN BY: | MG |
| CHECKED BY: | RB |

REVISIONS:

| REV | DATE | DESCRIPTION |
|---|---|---|
| 0 | 03/27/23 | 100% CONSTRUCTION DRAWING |
| B | 03/09/23 | JURISDICTION COMMENTS |
| A | 01/12/23 | 90% CONSTRUCTION DRAWING |

LICENSEE:

REGISTERED PROFESSIONAL ENGINEER
Michael P. Martin
8/31/2023
4/18/2023
No. 73000
CIVIL
STATE OF CALIFORNIA

PROJECT INFORMATION:

CLL05599

1765 HILLFAIR DR.
GLENDALE, CA 91208

SHEET TITLE:

GENERAL SPECIFICATIONS

SHEET NUMBER:

L-6

CELL TREES
Celebrating 20 Years in business

5401 S. CANADA PLACE
TUCSON, AZ 85706
PH: (520) 663-1330

# CLL05599

## 68'-0" MONOPINE

CELL TREES, INC. Job:

23-010

LOCATION:

1765 HILLFAIR DR.
GLENDALE, CA 91208
LOS ANGELES COUNTY

DRAWING INDEX



AT&T

CELL TREES
Celebrating 20 Years in business

JOB #: 23-010

VECTOR ENGINEERS
1635 N. Greenfield Rd., Suite 112
Mesa, AZ 85205
(480) 648-3514
www.vectorse.com

| DATE: 1/31/23 | DESIGNED: CDB | DRAFTER: CDB |
|---|---|---|

REVISIONS

| REV | DATE | DESCRIPTION |
|---|---|---|
| 1 | 3/17/23 | DESIGN UPDATE |

TITLE SHEET

CLL05599

68'-0" MONOPINE
1765 HILLFAIR DR.
GLENDALE, CA 91208
LOS ANGELES COUNTY

REGISTERED PROFESSIONAL ENGINEER
CHRIS DEAN BRAUN
C62930
STATE OF CALIFORNIA
May 30, 2023

A1212-0786-231

MP-1 REV 1

| SUMMARY OF SPECIAL INSPECTION | | |
|---|---|---|
| NO. | DESCRIPTION OF TYPE OF INSPECTION REQ'D, LOCATION, REMARKS, ETC. | INSPECTION TYPE |
| 1. | REQUIRED INSPECTIONS FOR SOIL/FOUNDATION: | |
| A. | VERIFY EXCAVATIONS ARE EXTENDED TO PROPER DEPTH AND THAT THE MATERIALS BELOW FOUNDATIONS ARE ADEQUATE TO ACHIEVE THE DESIGN BEARING CAPACITY | PERIODIC |
| B. | PERFORM CLASSIFICATION AND TESTING OF COMPACTED FILL MATERIALS | PERIODIC |
| C. | VERIFY USE OF PROPER MATERIALS, DENSITIES AND LIFT THICKNESSES DURING PLACEMENT AND COMPACTION OF COMPACTED FILL. | CONTINUOUS |
| D. | PRIOR TO PLACEMENT OF COMPACTED FILL, INSPECT SUBGRADE AND VERIFY THAT IT HAS BEEN PREPARED PROPERLY | PERIODIC |
| 2. | REQUIRED INSPECTIONS FOR CAST-IN-PLACE DEEP FOUNDATION ELEMENTS | |
| A. | INSPECT DRILLING OPERATIONS AND MAINTAIN COMPLETE AND ACCURATE RECORDS FOR EACH ELEMENT | CONTINUOUS |
| B. | VERIFY PLACEMENT LOCATIONS AND PLUMBNESS, CONFIRM ELEMENT DIAMETERS, BELL DIAMETERS (IF APPLICABLE), LENGTHS, EMBEDMENT INTO BEDROCK (IF APPLICABLE) AND ADEQUATE END-BEARING STRATA CAPACITY. RECORD CONCRETE OR GROUT VOLUMES. | CONTINUOUS |
| 3. | REQUIRED INSPECTIONS FOR CONCRETE CONSTRUCTION | |
| A. | INSPECT REINFORCEMENT AND VERIFY PLACEMENT | PERIODIC |
| B. | INSPECT ANCHORS CAST IN CONCRETE – PLUMBNESS, ORIENTATION, TOP AND BOTTOM TEMPLATES ARE INSTALLED, AND THAT THE MINIMUM EMBEDMENT SPECIFIED BY THE FOUNDATION DESIGNER IS MET. | PERIODIC |
| C. | VERIFY USE OF REQUIRED DESIGN MIX AND COMPLIANCE WITH ACI 318-19 | PERIODIC |
| D. | PRIOR TO CONCRETE PLACEMENT, FABRICATE SPECIMENS FOR STRENGTH TESTS, PERFORM SLUMP AND AIR CONTENT TESTS, AND DETERMINE THE TEMPERATURE OF THE CONCRETE. | CONTINUOUS |
| E. | INSPECT CONCRETE PLACEMENT FOR PROPER APPLICATION TECHNIQUES. | CONTINUOUS |
| F. | VERIFY MAINTENANCE OF SPECIFIED CURING TEMPERATURE AND TECHNIQUES | PERIODIC |
| G. | INSPECT FORMWORK FOR PROPER SHAPE, LOCATION AND DIMENSIONS. | PERIODIC |
| 4. | BOLTING: | |
| A. | ANCHOR BOLTS SHALL BE INSTALLED WITH A LOCKING MECHANISM AND BE TIGHTENED TO A "SNUG TIGHT" CONDITION PER AISC | PERIODIC |
| B. | ALL HIGH STRENGTH BOLTS, A325, SHALL BE TIGHTENED TO THE TURN OF NUT METHOD AS DEFINED BY AISC | PERIODIC |
| 5. | FIELD WELDING: | |
| A. | NO FIELD WELDING SHALL BE PERMITTED EXCEPT WHERE SPECIFICALLY NOTED ON THE STRUCTURAL DRAWINGS | <= 5/16, PERIODIC<br>> 5/16, CONTINUOUS |
| 6. | SHOP WELDING: | |
| A. | ALL SHOP WELDING OF STRUCTURAL STEEL SHALL BE PERFORMED BY AN APPROVED FABRICATOR'S SHOP PER 2022 CBC SECTION 1704.2.5 | PROVIDE CERTS. |
| B. | ALL WELDED CONNECTIONS SHALL CONFORM WITH THE LATEST EDITION OF THE AMERICAN WELDING SOCIETY (AWS) D1.1 | N/A |
| C. | WELD ELECTRODES SHALL BE LOW HYDROGEN E70XX U.N.O. | N/A |
| D. | VISUAL INSPECTION OF ALL WELDS SHALL BE PERFORMED BEFORE GALVANIZING. | INSPECT AND REPORT |
| E. | IF A WELD IS IN QUESTION PER THE VISUAL INSPECTION THEN IT SHALL BE TESTED USING AN APPROPRIATE TEST, I.E. DIE PENETRATION, MAGNETIC PARTICLE, U.T., ETC. | INSPECT AND REPORT |

SPECIAL INSPECTION:

1. SPECIAL INSPECTION SHALL BE PERFORMED ACCORDING TO 2022 CBC.
2. THE SPECIAL INSPECTOR SHALL BE APPROVED BY THE LOCAL JURISDICTION TO PERFORM THE TYPES OF INSPECTION REQUIRED.
3. ANY SUPPORT SERVICE PERFORMED BY THE ENGINEER OF RECORD DURING CONSTRUCTION SHALL BE DISTINGUISHED FROM INSPECTION SERVICES WHICH ARE FURNISHED BY OTHERS. THESE SUPPORT SERVICES PERFORMED BY THE ENGINEER OF RECORD ARE ONLY FOR THE PURPOSE OF ASSISTING IN THE QUALITY CONTROL AND IN ACHIEVING CONFORMANCE WITH THE CONTRACT DOCUMENTS. THIS SUPPORT DOES NOT GUARANTEE THE CONTRACTOR'S PERFORMANCE AND SHALL NOT BE CONSTRUED AS SUPERVISION OF CONSTRUCTION.

GENERAL DESIGN NOTES:

STRUCTURAL DESIGN IS BASED ON THE CALIFORNIA BUILDING CODE, 2022 EDITION (2021 IBC) AND THE TIA-222-H STANDARD

DESIGN LOADS:

WIND: WIND SPEED = 95 MPH (3-SEC GUST) PER THE ASCE 7-16 STANDARD
RISK CATEGORY: II
EXPOSURE: C
TOPOGRAPHIC CATEGORY: 1
CREST HEIGHT: 0 FT
ELEVATION: 1,095 FT ABOVE SEA LEVEL

ICE: NONE PER THE TIA-222-H STANDARD

SEISMIC:
IMPORTANCE FACTOR: 1.00
RISK CATEGORY: II
MAPPED SPECTRAL RESPONSE ACCELERATIONS:
$S_S$ = 2.064g, $S_1$ = 0.757g
SITE CLASS: C
SPECTRAL RESPONSE COEFFICIENTS:
$S_{DS}$ = 1.651g, $S_{D1}$ = 0.707g
SEISMIC DESIGN CATEGORY: E
BASIC SEISMIC-FORCE-RESISTING-SYSTEM:
TELECOMMUNICATION TOWER: STEEL POLE
SEISMIC BASE SHEAR, V: 10.9 K
SEISMIC RESPONSE COEFFICIENT, Cs: 0.363
RESPONSE MODIFICATION FACTOR, R: 1.5
ANALYSIS PROCEDURE: EQUIVALENT LATERAL FORCE

BASE DESIGN REACTIONS:

MOMENT, M = 1,357 K-FT (1.0 WIND)
SHEAR, V = 30.4 K (1.0 WIND)
AXIAL, P = 35.7 K (1.2 DEAD)

THE MONOPOLE, BASE PLATE, AND FOUNDATION ARE DESIGNED FOR THE DESIGN LOADING. THE ANTENNA MOUNTS ARE ONLY DESIGNED FOR THE INITIAL LOADING. SEE DTL 2/MP-3.

STRUCTURAL STEEL:

1. POLYGONAL MONOPOLE SHAFT STEEL SHALL CONFORM w/ ASTM A572 GR. 65, U.N.O.
2. BASEPLATE STEEL SHALL CONFORM w/ ASTM A572 GR. 50, U.N.O.
3. ALL STEEL PIPE SHALL CONFORM w/ ASTM A53 GR. B (35 KSI), U.N.O.
4. ALL STEEL RECTANGULAR TUBES (HSS) SHALL CONFORM w/ ASTM A500 GR. B (46 KSI), U.N.O.
5. REINFORCED PORT STEEL SHALL CONFORM w/ ASTM A572 GR. 65, U.N.O.
6. ALL OTHER STEEL SHAPES & PLATES SHALL CONFORM w/ ASTM A36, U.N.O.

STRUCTURAL STEEL (CONT.):

7. ALL BOLTS FOR STEEL-TO-STEEL CONNECTIONS SHALL CONFORM w/ ASTM F3125 GR. A325, U.N.O. AND SHALL BE TIGHTENED PER THE "TURN-OF-NUT" METHOD AS DEFINED BY AISC.
8. ALL ANCHOR BOLTS SHALL CONFORM w/ ASTM A615 GR. 75, U.N.O.
9. ALL WELDING SHALL BE PERFORMED BY CERTIFIED WELDERS IN ACCORDANCE w/ THE LATEST VERSION OF THE AMERICAN WELDING SOCIETY AWS D1.1. STEEL WELDS SHALL BE BY E70XX LOW HYDROGEN ELECTRODES, U.N.O.
10. ALL STEEL SURFACES SHALL BE GALVANIZED IN ACCORDANCE w/ ASTM A123 AND ASTM F2329 STANDARDS. ANY GALVANIZED SURFACES THAT BECOME DAMAGED DURING SHIPPING, WELDING, OR ERECTION MUST BE COATED WITH A MINIMUM OF TWO COATS OF COLD GALVANIZING COMPOUND THAT COMPLIES WITH THE REQUIREMENTS OF ASTM A780

DISCLAIMERS:

1. ALL STRUCTURAL COMPONENTS TO BE CONNECTED TOGETHER SHALL BE COMPLETELY FIT UP ON THE GROUND OR OTHERWISE VERIFIED FOR COMPATIBILITY PRIOR TO LIFTING ANY COMPONENT INTO PLACE. REPAIRS REQUIRED DUE TO FIT-UP OR CONNECTION COMPATIBILITY PROBLEMS AFTER PARTIAL ERECTION ARE THE FINANCIAL RESPONSIBILITY OF THE CONTRACTOR.
2. WHERE EFFECTIVE PROJECTED AREAS (EPA) ARE USED, IT IS THE RESPONSIBILITY OF OTHERS TO VERIFY INSTALLED EQUIPMENT DOES NOT EXCEED LISTED EPA.
3. SOME TELECOMMUNICATIONS STRUCTURES ARE SUSCEPTIBLE TO WIND-INDUCED OSCILLATIONS. OSCILLATIONS MAY OCCUR AT LOW OR MODERATE WIND SPEEDS. TIA PROVIDES NO PRACTICAL ANALYTICS METHOD TO PREDICT AND PREVENT WIND-INDUCED STRUCTURAL OSCILLATIONS. VECTOR STRUCTURAL ENGINEERING RECOMMENDS FREQUENT MONITORING TO IDENTIFY WIND-INDUCED OSCILLATION AND REGULAR CONDITION ASSESSMENTS TO IDENTIFY FATIGUE CRACKING, LOOSE OR MISSING BOLTS, AND ANY OTHER STRUCTURAL DEFECTS. ANY OSCILLATION OR DEFECTS OBSERVED SHALL BE IMMEDIATELY REPORTED TO VECTOR STRUCTURAL ENGINEERING FOR FURTHER EVALUATION AND POSSIBLE REPAIRS OR MODIFICATIONS WHICH MAY BE REQUIRED AT THE OWNER'S EXPENSE.
4. THE CONTRACTOR ASSUMES RESPONSIBILITY FOR JOB SITE CONDITIONS DURING THE COURSE OF CONSTRUCTION OF THE PROJECT, INCLUDING THE SAFETY OF ALL PERSONS AND PROPERTY IN ACCORDANCE WITH GENERALLY ACCEPTED CONSTRUCTION PRACTICES. THIS REQUIREMENT APPLIES CONTINUOUSLY, IS NOT LIMITED TO NORMAL WORKING HOURS, AND INCLUDES FIRE PREVENTION AND/OR DAMAGE FROM HEAT DUE TO FIELD WELDING.

AT&T

CELL TREES
Celebrating 20 Years in Business

JOB #: 23-010

VECTOR ENGINEERS
1635 N. Greenfield Rd., Suite 112
Mesa, AZ 85205
(480) 648-3514
www.vectorse.com

| DATE: 1/31/23 | DESIGNED: CDB | DRAFTER: CDB |
|---|---|---|

REVISIONS

| REV | DATE | DESCRIPTION |
|---|---|---|
| 1 | 3/17/23 | DESIGN UPDATE |

NOTES & SPECIFICATIONS

CLL05599

68'-0" MONOPINE
1765 HILLFAIR DR.
GLENDALE, CA 91208
LOS ANGELES COUNTY

REGISTERED PROFESSIONAL ENGINEER
CHRISTOPHER DEW BRAUN
C82990
STATE OF CALIFORNIA

May 30, 2023

A1212-0786-231

MP-2

REV 1

INITIAL LOADING:
ANTENNA C.L. @ 60'-0" A.G.L.:
(9) 72.8"x18"x7", 80.2 lb PANEL ANTENNAS
(18) 28"x19"x11", 75 lb RRUs
(3) 29"x16"x11", 40 lb SURGE/RAYCAP/J-BOX
T-ARM MOUNTS PER SHEET MP-5
ANTENNA C.L. @ 50'-9" A.G.L.:
(3) 31"x15.9"x10.6", 83.6 lb PANEL ANTENNAS
T-ARM MOUNTS PER SHEET MP-5.1

DESIGN LOADING:
ANTENNA C.L. @ 60'-0" A.G.L.:
(9) 96"x18.1"x9.6", 127 lb PANEL ANTENNAS
(18) 28"x19"x11", 75 lb RRUs
(3) 29"x16"x11", 40 lb SURGE/RAYCAP/J-BOX
(3) SECTOR FRAMES BY OTHERS
($EPA_{FRONT}$=23.5 $ft^2$, $EPA_{SIDE}$=23.5 $ft^2$, WEIGHT=600 lbs)
ANTENNA C.L. @ 50'-9" A.G.L.:
(6) 96"x12"x9", 100 lb PANEL ANTENNAS
(3) 7'-6" T-ARM MOUNTS BY OTHERS
($EPA_{FRONT}$=7.56 $ft^2$, $EPA_{SIDE}$=4.02 $ft^2$, WEIGHT=273 lbs)
M.W. ANTENNA C.L. @ 40'-9" A.G.L.:
(2) 8'-0" MICROWAVE DISH (3 GHz ASSUMED)

NOTE: ALL FEEDLINES SHALL BE ROUTED INSIDE THE POLE SHAFT

**APPURTENANCES** (2)
N.T.S.

| MONOPOLE SECTION CHART[2] | | | | | |
|---|---|---|---|---|---|
| SECTION | LENGTH | ØTOP[4] | ØBOTTOM[4] | THICKNESS | WEIGHT[1,3] |
| 1 | 43'-0" | 21.00" | 32.61" | 3/16" | 2.6 K |
| 2 | 23'-6" | 31.02" | 37.37" | 1/4" | 3.3 K |

NOTES:
1. SECTION WEIGHT INCLUDES PORTS. LOWEST SECTION WEIGHT INCLUDES BASEPLATE WEIGHT.
2. DESIGN TAPER = 0.27 in/ft.
3. WEIGHTS LISTED IN THIS CHART ARE RAW STEEL WEIGHTS. FINAL WEIGHTS MAY BE UP TO 22% GREATER DUE TO GALVANIZING AND OTHER MISCELLANEOUS ITEMS.
4. DIAMETER OF POLE SECTIONS AT LAP SPLICES MAY BE ADJUSTED BY UP TO 0.06" TO ACCOUNT FOR THE THICKNESS OF COATINGS.

**POLE SECTIONS** (3)
N.T.S.

NOTE: BRANCHES ARE SHOWN FOR ILLUSTRATIVE PURPOSES ONLY AND ARE NOT NECESSARILY SHOWN TO SCALE.

NOTE: ANTENNAS & PORTS ARE SHOWN FOR ILLUSTRATIVE PURPOSES & ARE NOT NECESSARILY SHOWN TO SCALE

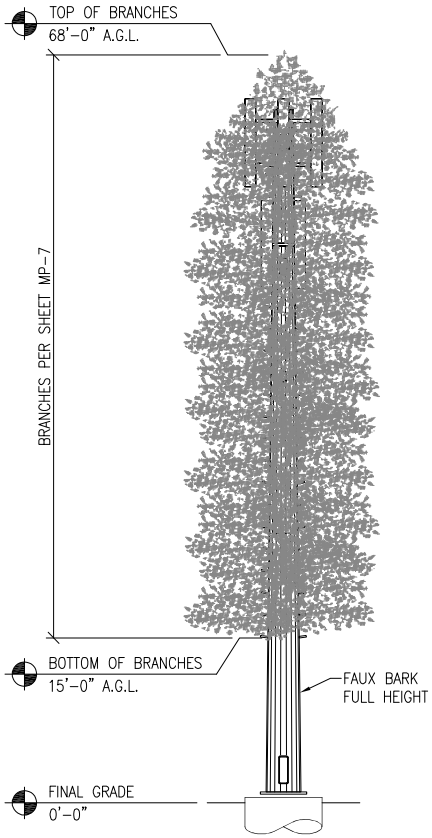


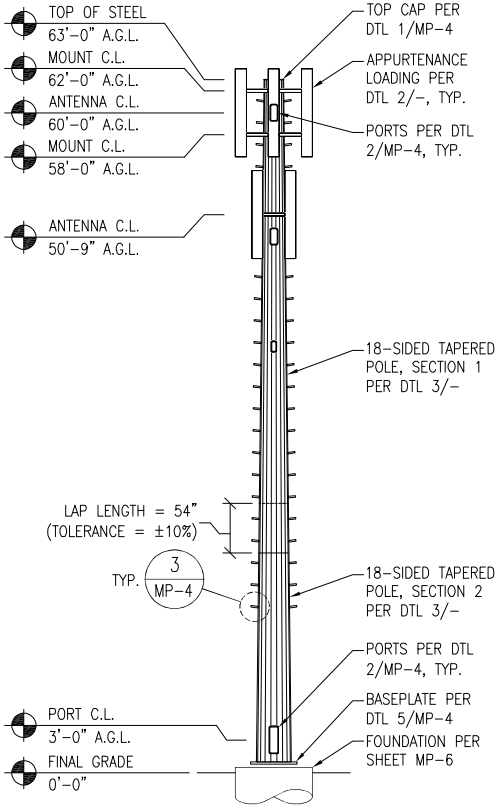


**ELEVATIONS** (1)
N.T.S.

AT&T

CELL TREES

JOB #: 23-010


VECTOR ENGINEERS
1635 N. Greenfield Rd., Suite 112
Mesa, AZ 85205
(480) 648-3514
www.vectorse.com


| DATE: 1/31/23 | DESIGNED: CDB | DRAFTER: CDB |
|---|---|---|

REVISIONS

| REV | DATE | DESCRIPTION |
|---|---|---|
| 1 | 3/17/23 | DESIGN UPDATE |

ELEVATION VIEWS

CLL05599

68'-0" MONOPINE
1765 HILLFAIR DR.
GLENDALE, CA 91208
LOS ANGELES COUNTY

REGISTERED PROFESSIONAL ENGINEER
CHRISTOPHER DON BROWN
C62930
STATE OF CALIFORNIA
May 30, 2023

A1212-0786-231

MP-3 REV 1

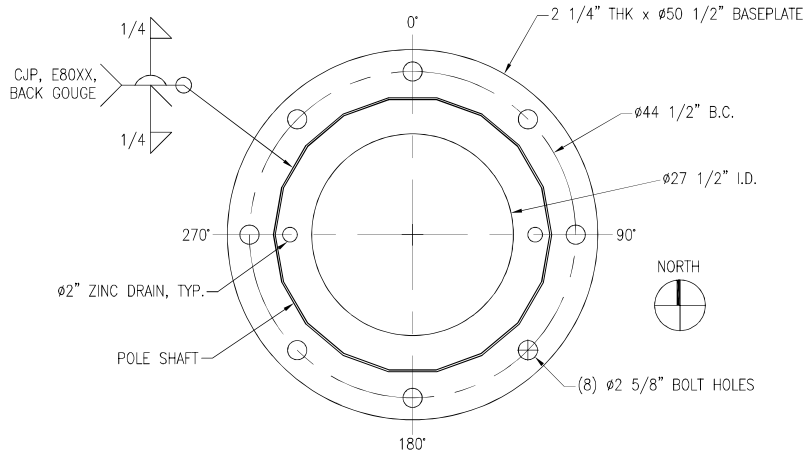


**BASEPLATE** 5

N.T.S.

A WEEP HOLE OR OTHER MEANS OF PREVENTING WATER BUILD UP SHALL BE PROVIDED FOR BRANCH RECEIVERS

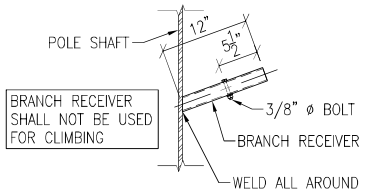


BRANCH RECEIVERS ARE BY CELL TREES AND SHOWN FOR REFERENCE ONLY. COMPONENTS ARE NOT REVIEWED BY VECTOR.

**BRANCH RECEIVER** 3

N.T.S.

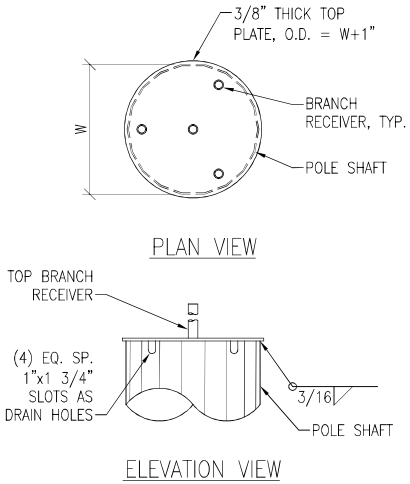


**TOP CAP** 1

N.T.S.

| PORT SCHEDULE | | | | | |
|---|---|---|---|---|---|
| C.L. ELEV. | PORT SIZE (B x H) | D | T | QTY | AZIMUTH(S) |
| 60'-0" | 8"x18" | 2 1/2" | 1/2" | 4 | 0°/90°/180°/270° |
| 48'-9" | 8"x18" | 2 1/2" | 1/2" | 4 | 0°/90°/180°/270° |
| 38'-9" | 6"x12" | 2" | 1/2" | 1 | 0° |
| 3'-0" | 10"x30" | 4" | 3/4" | 2 | 0°/180° |

**PORT SCHEDULE** 4

N.T.S.

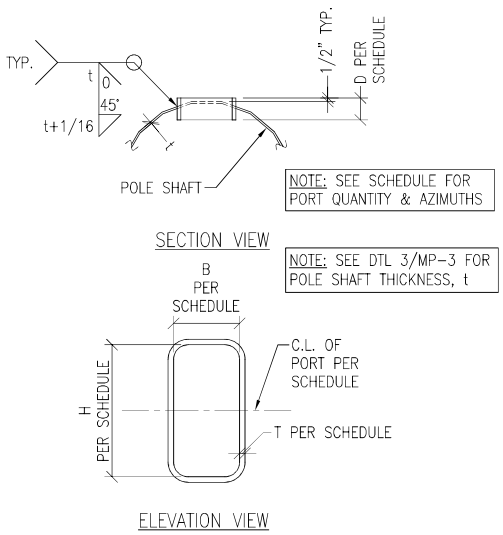


NOTE: SEE SCHEDULE FOR PORT QUANTITY & AZIMUTHS

NOTE: SEE DTL 3/MP-3 FOR POLE SHAFT THICKNESS, t

**PORTS** 2

N.T.S.

AT&T

CELL TREES

JOB #: 23-010

VECTOR ENGINEERS

1635 N. Greenfield Rd., Suite 112
Mesa, AZ 85205

(480) 648-3514
www.vectorse.com

| DATE: 1/31/23 | DESIGNED: CDB | DRAFTER: CDB |
|---|---|---|

REVISIONS

| REV | DATE | DESCRIPTION |
|---|---|---|
| 1 | 3/17/23 | DESIGN UPDATE |

DETAILS

CLL05599

68'-0" MONOPINE
1765 HILLFAIR DR.
GLENDALE, CA 91208
LOS ANGELES COUNTY

REGISTERED PROFESSIONAL ENGINEER
CHRISTOPHER DEW BRAND
C82930
STATE OF CALIFORNIA

May 30, 2023

A1212-0786-231

MP-4

REV 1

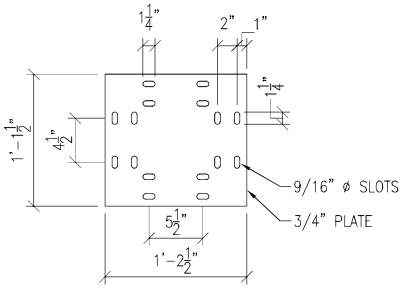


**PLATE #1** (4) N.T.S.

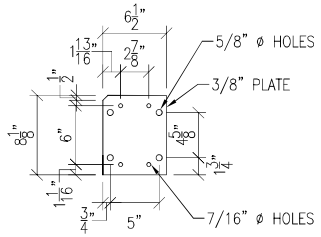


**PLATE #2** (5) N.T.S.

**NOT USED** (6) N.T.S.

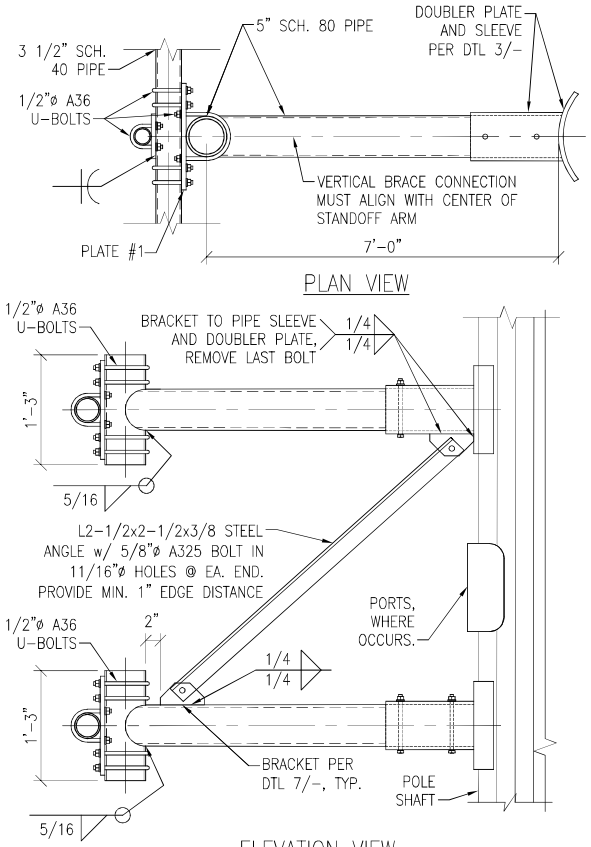


N.T.S. (2)

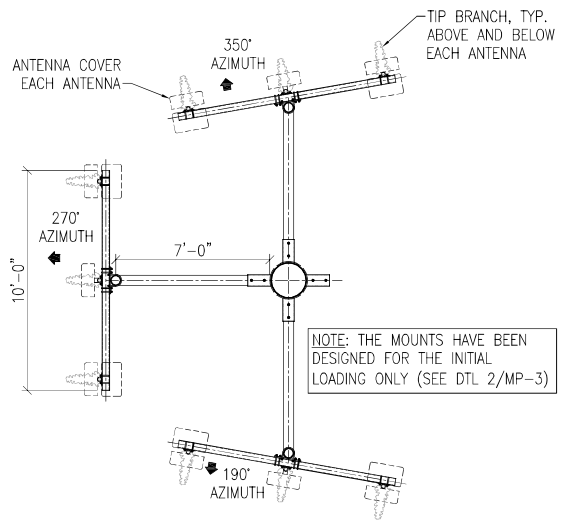


NOTE: THE MOUNTS HAVE BEEN DESIGNED FOR THE INITIAL LOADING ONLY (SEE DTL 2/MP-3)

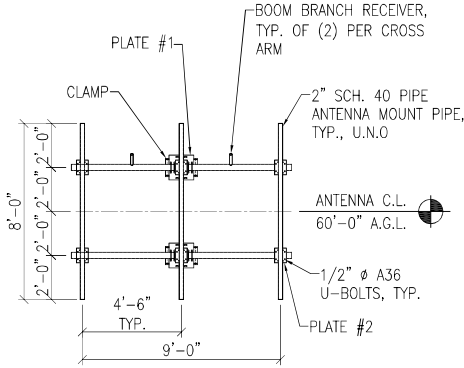


**INITIAL LOADING ANTENNA MOUNT** (1) N.T.S.

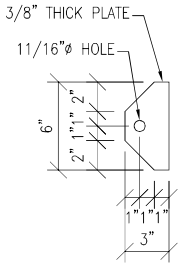


**BRACKET** (7) N.T.S.

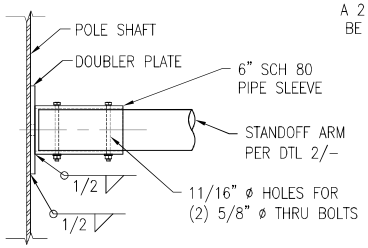


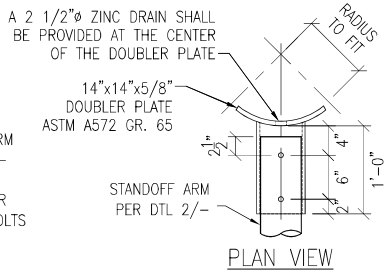


**CLAMP** (3) N.T.S.

AT&T

CELL TREES

JOB #: 23-010

VECTOR ENGINEERS
1635 N. Greenfield Rd., Suite 112
Mesa, AZ 85205
(480) 646-3514
www.vectorse.com

| DATE: 1/31/23 | DESIGNED: CDB | DRAFTER: CDB |
|---|---|---|

REVISIONS

| REV | DATE | DESCRIPTION |
|---|---|---|
| 1 | 3/17/23 | DESIGN UPDATE |

# ANTENNA MOUNT DETAILS

CLL05599

68'-0" MONOPINE
1765 HILLFAIR DR.
GLENDALE, CA 91208
LOS ANGELES COUNTY

REGISTERED PROFESSIONAL ENGINEER CHRISTOPHER DAVID BRAY C82930 STATE OF CALIFORNIA

May 30, 2023

A1212-0786-231

MP-5 REV 1

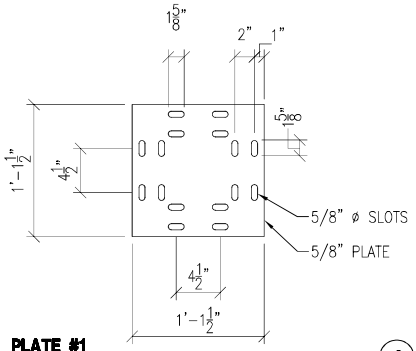


**PLATE #1** (4) N.T.S.

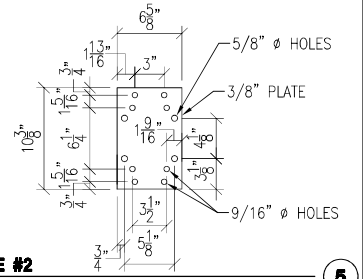


**PLATE #2** (5) N.T.S.

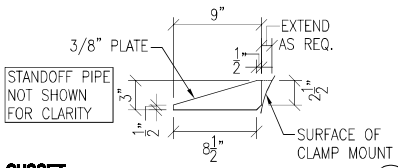


**GUSSET** (6) N.T.S.

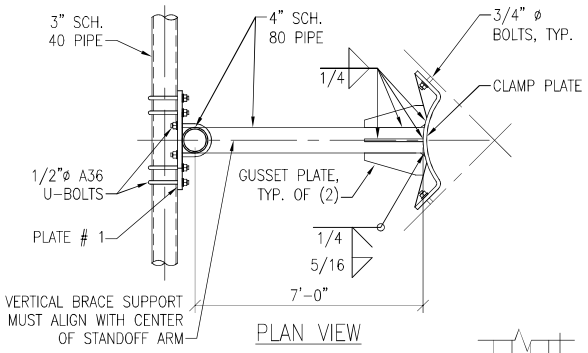


PLAN VIEW

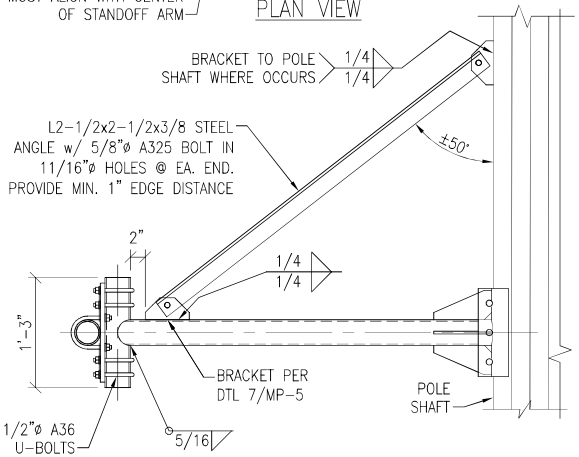


ELEVATION VIEW (2) N.T.S.

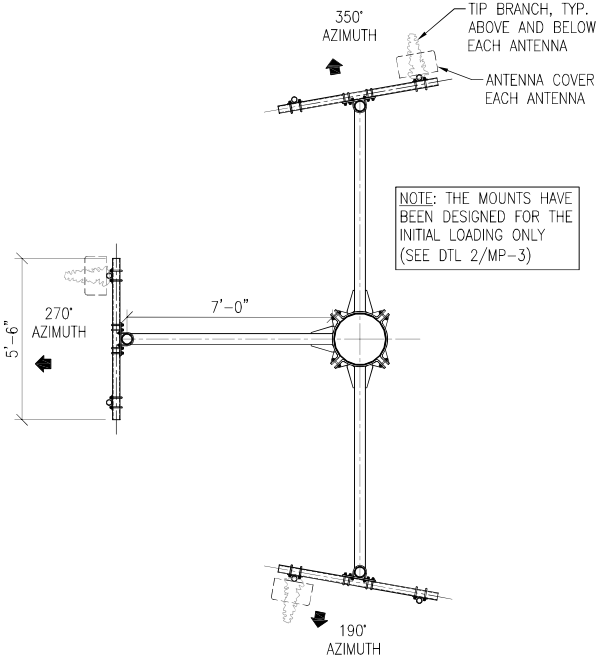


PLAN VIEW

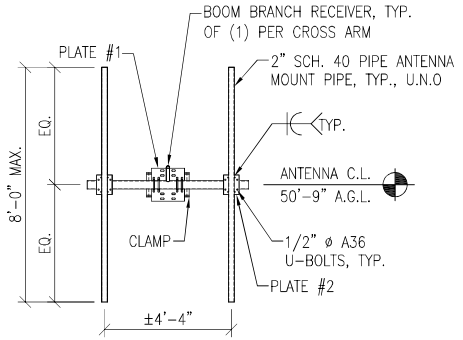


ELEVATION VIEW

**INITIAL LOADING ANTENNA MOUNT** (1) N.T.S.

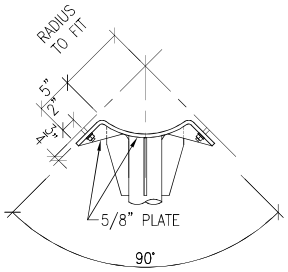


PLAN VIEW

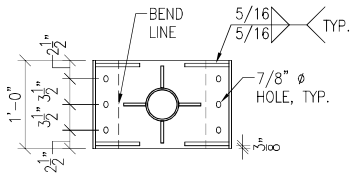


ELEVATION VIEW

**CLAMP** (3) N.T.S.

AT&T

CELL TREES

JOB #: 23-010

VECTOR ENGINEERS
1635 N. Greenfield Rd., Suite 112
Mesa, AZ 85205
(480) 646-3514
www.vectorse.com

| DATE: 1/31/23 | DESIGNED: CDB | DRAFTER: CDB |
|---|---|---|

REVISIONS

| REV | DATE | DESCRIPTION |
|---|---|---|
| 1 | 3/17/23 | DESIGN UPDATE |

ANTENNA MOUNT DETAILS

CLL05599

68'-0" MONOPINE
1765 HILLFAR DR.
GLENDALE, CA 91208
LOS ANGELES COUNTY

May 30, 2023

A1212-0786-231

MP-5.1 REV 1

FOUNDATION NOTES:

1. FOUNDATION DESIGN IS BASED ON THE FOLLOWING GEOTECHNICAL REPORT:

   GEOBODEN INC.
   REPORT: CLL05599-1-01
   DATE: DECEMBER 26, 2022

2. ALL CONCRETE SHALL USE TYPE II PORTLAND CEMENT AND HAVE A MINIMUM COMPRESSIVE STRENGTH OF 4000 PSI AT 28 DAYS. CONCRETE SHALL HAVE A MINIMUM OF 6% ENTRAINED AIR (WHERE FROST DEPTH > 0"). CONCRETE SHALL HAVE A MAXIMUM WATER/CEMENT RATIO OF 0.50. CONCRETE SHALL HAVE A SLUMP OF 5" (±1") IF PLACED IN A DRY SHAFT WITHOUT TEMPORARY CASING OR 7" (±1") IF A TEMPORARY CASING AND/OR DRILLING FLUIDS ARE USED UNLESS OTHERWISE SPECIFIED IN THE GEOTECHNICAL REPORT. ALL CONCRETE WORK SHALL BE IN ACCORDANCE WITH "THE BUILDING CODE REQUIREMENTS FOR REINFORCED CONCRETE," ACI 318-19. FOUNDATION INSTALLATION SHALL BE IN ACCORDANCE WITH ACI 336, "STANDARD SPECIFICATIONS FOR THE CONSTRUCTION OF DRILLED PIERS," LATEST EDITION. SPECIAL INSPECTION SHALL BE PERFORMED AS REQUIRED PER CHAPTER 17 OF THE BUILDING CODE.

3. REINFORCING STEEL SHALL CONFORM WITH THE REQUIREMENTS OF ASTM A-615, GRADE 60. ALL REINFORCING DETAILS SHALL CONFORM TO "MANUAL OF STANDARD PRACTICE FOR DETAILING REINFORCED CONCRETE STRUCTURES," ACI 315, LATEST EDITION, UNLESS DETAILED OTHERWISE ON THIS DRAWING.

4. INSTALLATION OF THE FOUNDATION MUST BE OBSERVED BY A REPRESENTATIVE OF THE GEOTECHNICAL ENGINEER FIRM. GEOTECHNICAL ENGINEER TO PROVIDE A NOTICE OF INSPECTION FOR THE BUILDING INSPECTOR FOR REVIEW AND RECORD PURPOSES.

5. THE CONTRACTOR SHALL REFER TO THE GEOTECHNICAL REPORT REGARDING INSTALLATION METHOD, REQUIRED EQUIPMENT, WARNINGS, AND ALL OTHER RECOMMENDATIONS OR REQUIREMENTS RELATED TO THE FOUNDATION

6. MONOPOLE MAY BE ERECTED 3-DAYS AFTER FOUNDATION IS INSTALLED AND ONCE CONCRETE STRENGTH IS AT LEAST 4000 PSI.

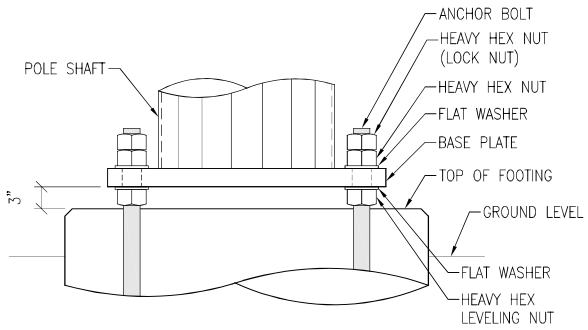


N.T.S.

2

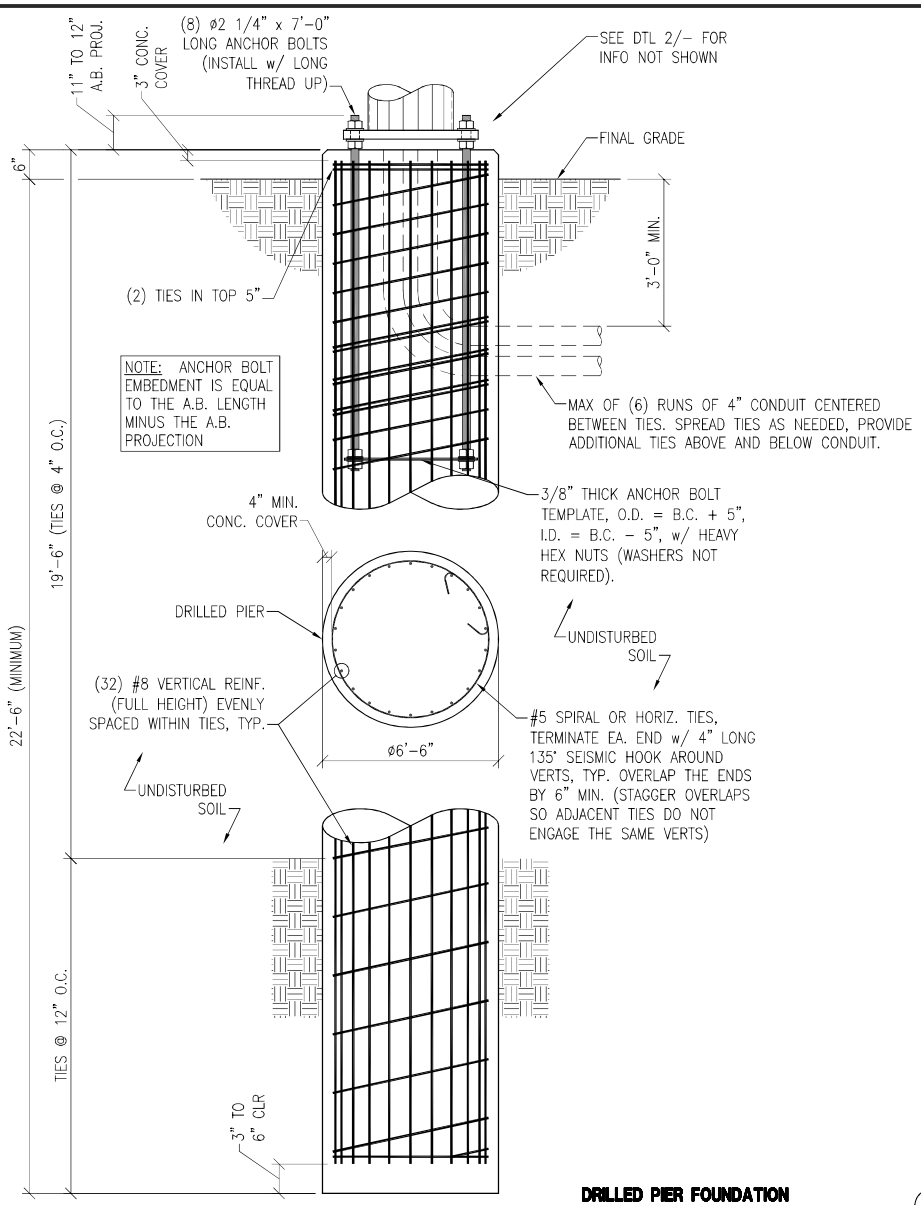


**DRILLED PIER FOUNDATION**

N.T.S.

1

AT&T

CELL TREES

JOB #: 23-010

VECTOR ENGINEERS

1635 N. Greenfield Rd., Suite 112
Mesa, AZ 85205

(480) 648-3514
www.vectorse.com

| DATE: 1/31/23 | DESIGNED: CDB | DRAFTER: CDB |
|---|---|---|

REVISIONS

| REV | DATE | DESCRIPTION |
|---|---|---|
| 1 | 3/17/23 | DESIGN UPDATE |

FOUNDATION

CLL05599

68'-0" MONOPINE
1765 HILLFAIR DR.
GLENDALE, CA 91208
LOS ANGELES COUNTY

May 30, 2023

A1212-0786-231

MP-6

REV 1

NORTH

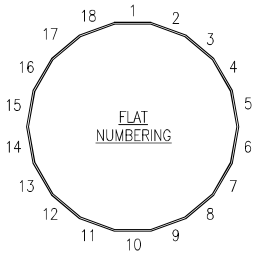


T = BRANCH TIPS
BB = BOOM BRANCH
X = VACANT RECEIVER
2 = 2'-0" BRANCH
3 = 3'-0" BRANCH
4 = 4'-0" BRANCH
5 = 5'-0" BRANCH
6 = 6'-0" BRANCH
7 = 7'-0" BRANCH
8 = 8'-0" BRANCH
9 = 9'-0" BRANCH
10 = 10'-0" BRANCH
TOTAL BRANCH COUNT = 154
AVERAGE = 3.20 BRANCHES PER FOOT

## BRANCH LAYOUT

| Elev | Deg | 1 | 2 | 3 | 4 | 5 | 6 | 7 | 8 | 9 | 10 | 11 | 12 | 13 | 14 | 15 | 16 | 17 | 18 |
|---|---|---|---|---|---|---|---|---|---|---|---|---|---|---|---|---|---|---|---|
| 63.00 | 90 | | | | | | | | | 5 | | | | | | | | | |
| 63.00 | 30 | | 4 | | | | | | 4 | | | | | | 4 | | | | |
| 62.50 | 30 | | | | 6 | | | | | | 6 | | | | | | 6 | | |
| 61.50 | 15 | | | | | | 8 | | | | | | 8 | | | | | | 8 |
| 60.50 | 15 | | | 10 | | | | | | 10 | | | | | | 10 | | | |
| 60.00 | | | BB | | | BB | | | BB | | | BB | | | BB | | | BB | |
| 59.00 | 0 | 11 | | | | | | 11 | | | | | | 11 | | | | | |
| 58.00 | 0 | | | | | 11 | | | | | | 11 | | | | | | 11 | |
| 56.00 | 0 | | 11 | | | | | | 11 | | | | | | 11 | | | | |
| 55.00 | 15 | | | | 11 | | | | | | 11 | | | | | | 11 | | |
| 54.00 | 15 | | | | | | 11 | | | | | | 11 | | | | | | 11 |
| 53.00 | 15 | | | 11 | | | | | | 11 | | | | | | 11 | | | |
| 52.00 | 15 | 11 | | | | | | 11 | | | | | | 11 | | | | | |
| 51.50 | 15 | | | | | 11 | | | | | | 11 | | | | | | 11 | |
| 50.75 | | | | BB | | | | | | BB | | | | | | BB | | | |
| 49.75 | 15 | | 11 | | | | | | 11 | | | | | | 11 | | | | |
| 48.75 | 15 | | | | 11 | | | | | | 11 | | | | | | 11 | | |
| 47.75 | 15 | | | | | | 11 | | | | | | 11 | | | | | | 11 |
| 46.75 | 15 | | | 11 | | | | | | 11 | | | | | | 11 | | | |
| 45.75 | 15 | 11 | | | | | | 11 | | | | | | 11 | | | | | |
| 44.75 | 15 | | | | | 11 | | | | | | 11 | | | | | | 11 | |
| 43.75 | 15 | | 12 | | | | | | 12 | | | | | | 12 | | | | |
| 42.75 | 15 | | | | 11 | | | | | | 11 | | | | | | 11 | | |
| 41.75 | 15 | | | | | | 12 | | | | | | 12 | | | | | | 12 |
| 41.25 | 15 | | | 11 | | | | | | 11 | | | | | | 11 | | | |
| 40.75 | | | | | | | | | | | | | | | | | | | |
| 40.00 | 15 | 12 | | | | | | 12 | | | | | | 12 | | | | | |
| 39.00 | 15 | | | | | 11 | | | | | | 11 | | | | | | 11 | |
| 38.00 | 15 | | 12 | | | | | | 12 | | | | | | 12 | | | | |
| 37.00 | 15 | | | | 12 | | | | | | 12 | | | | | | 12 | | |
| 36.00 | 15 | | | | | | 12 | | | | | | 12 | | | | | | 12 |
| 35.00 | 15 | | | 12 | | | | | | 12 | | | | | | 12 | | | |
| 34.00 | 15 | 12 | | | | | | 12 | | | | | | 12 | | | | | |
| 33.00 | 15 | | | | | 12 | | | | | | 12 | | | | | | 12 | |
| 32.00 | 15 | | 12 | | | | | | 12 | | | | | | 12 | | | | |
| 31.00 | 15 | | | | 12 | | | | | | 12 | | | | | | 12 | | |
| 30.00 | 15 | | | | | | 12 | | | | | | 12 | | | | | | 12 |
| 29.00 | 15 | | | 12 | | | | | | 12 | | | | | | 12 | | | |
| 28.00 | 15 | 12 | | | | | | 12 | | | | | | 12 | | | | | |
| 27.00 | 15 | | | | | 12 | | | | | | 12 | | | | | | 12 | |
| 26.00 | 15 | | 13 | | | | | | 13 | | | | | | 13 | | | | |
| 25.00 | 15 | | | | 12 | | | | | | 12 | | | | | | 12 | | |
| 24.00 | 15 | | | | | | 13 | | | | | | 13 | | | | | | 13 |
| 23.00 | 15 | | | 12 | | | | | | 12 | | | | | | 12 | | | |
| 22.00 | 15 | 13 | | | | | | 13 | | | | | | 13 | | | | | |
| 21.00 | 15 | | | | | 12 | | | | | | 12 | | | | | | 12 | |
| 20.00 | 15 | | 13 | | | | | | 13 | | | | | | 13 | | | | |
| 19.00 | 15 | | | | 13 | | | | | | 13 | | | | | | 13 | | |
| 18.00 | 15 | | | | | | 13 | | | | | | 13 | | | | | | 13 |
| 17.00 | 15 | | | 13 | | | | | | 13 | | | | | | 13 | | | |
| 16.00 | 15 | 13 | | | | | | 13 | | | | | | 13 | | | | | |
| 15.00 | 15 | | | | | 13 | | | | | | 13 | | | | | | 13 | |

AT&T

CELL TREES
Celebrating 20 Years in Business

JOB #: 23-010


VECTOR ENGINEERS
1635 N. Greenfield Rd., Suite 112
Mesa, AZ 85205
(480) 648-3514
www.vectorse.com


| DATE: 1/31/23 | DESIGNED: CDB | DRAFTER: CDB |
|---|---|---|

REVISIONS

| REV | DATE | DESCRIPTION |
|---|---|---|
| 1 | 3/17/23 | DESIGN UPDATE |

BRANCH LAYOUT

CLL05599

68'-0" MONOPINE
1765 HILLFAIR DR.
GLENDALE, CA 91208
LOS ANGELES COUNTY

May 30, 2023

A1212-0786-231

MP-7

REV 1